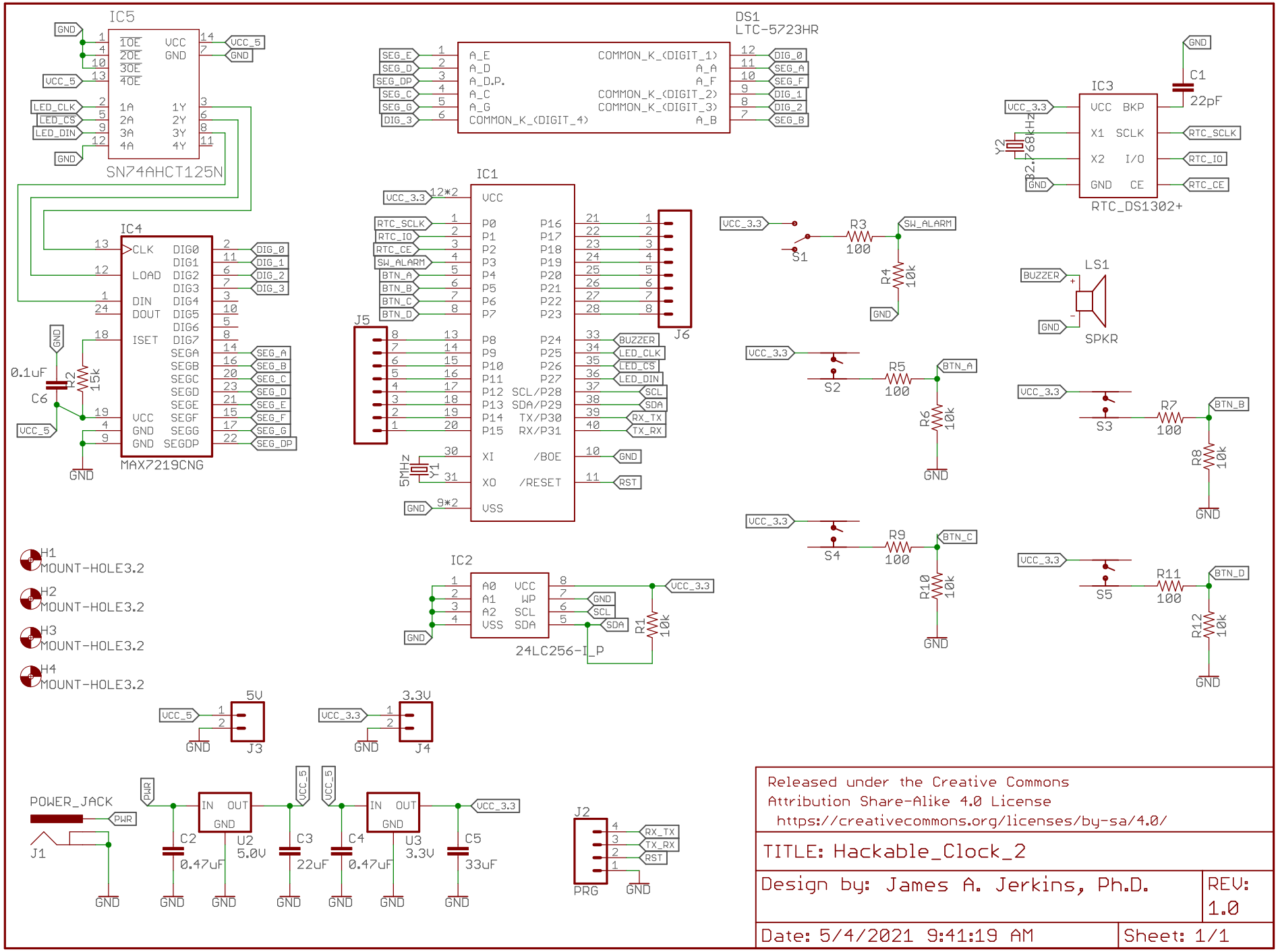

Released under the Creative Commons
Attribution Share-Alike 4.0 License
https://creativecommons.org/licenses/by-sa/4.0/

TITLE: Hackable_Clock_2

Design by: James A. Jerkins, Ph.D.

REV: 1.0

Date: 5/4/2021 9:41:19 AM

Sheet: 1/1