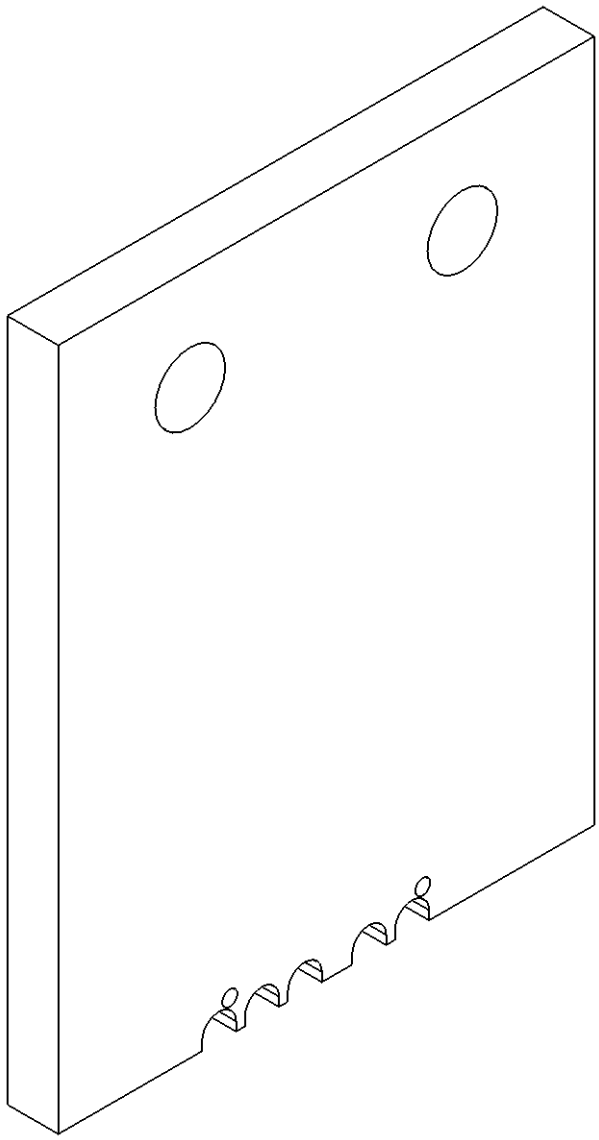

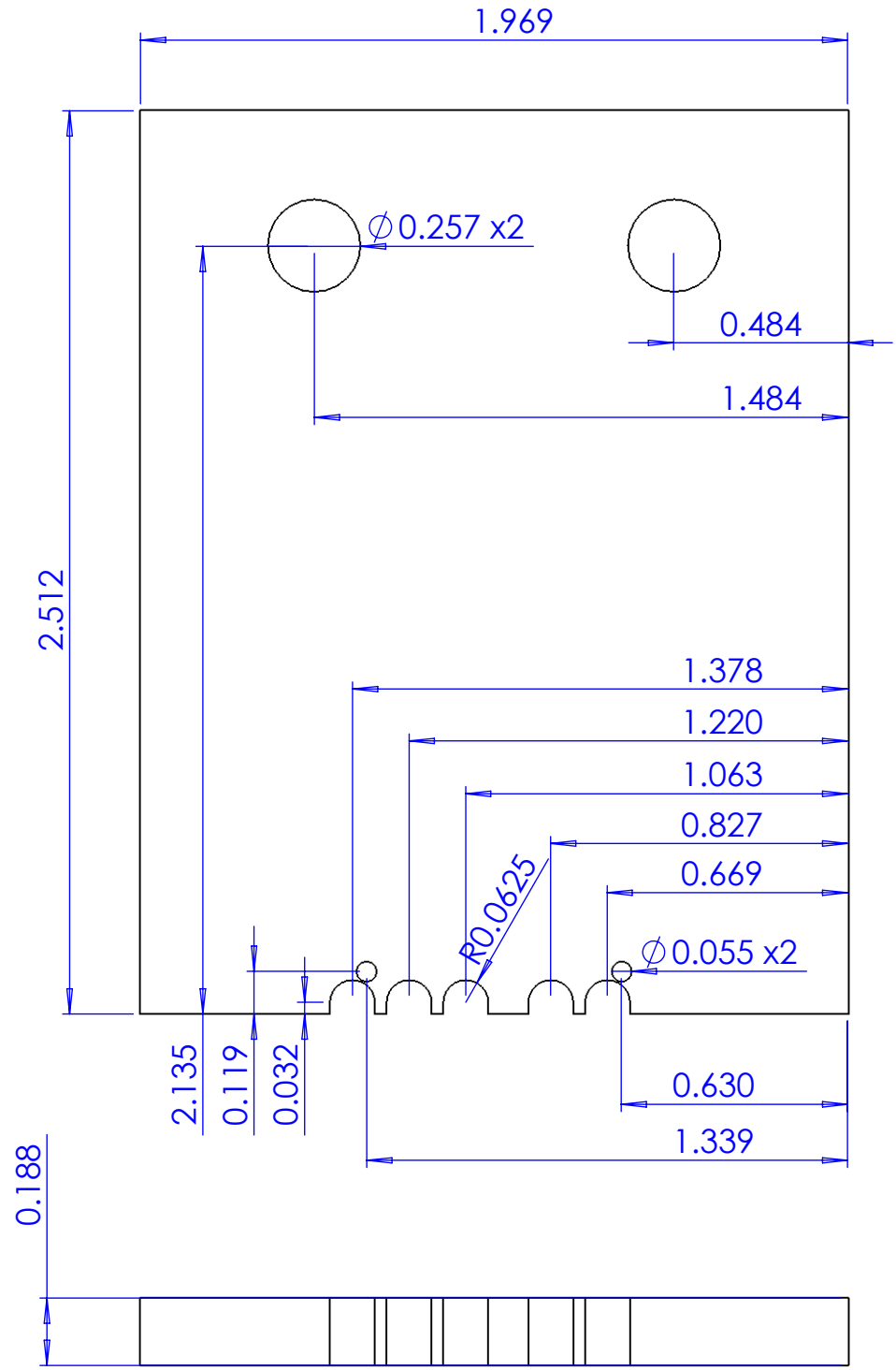
1.969
∅0.257 x2
0.484
1.484
2.512
1.378
1.220
1.063
0.827
0.669
R0.0625
∅0.055 x2
2.135
0.119
0.032
0.630
1.339
0.188