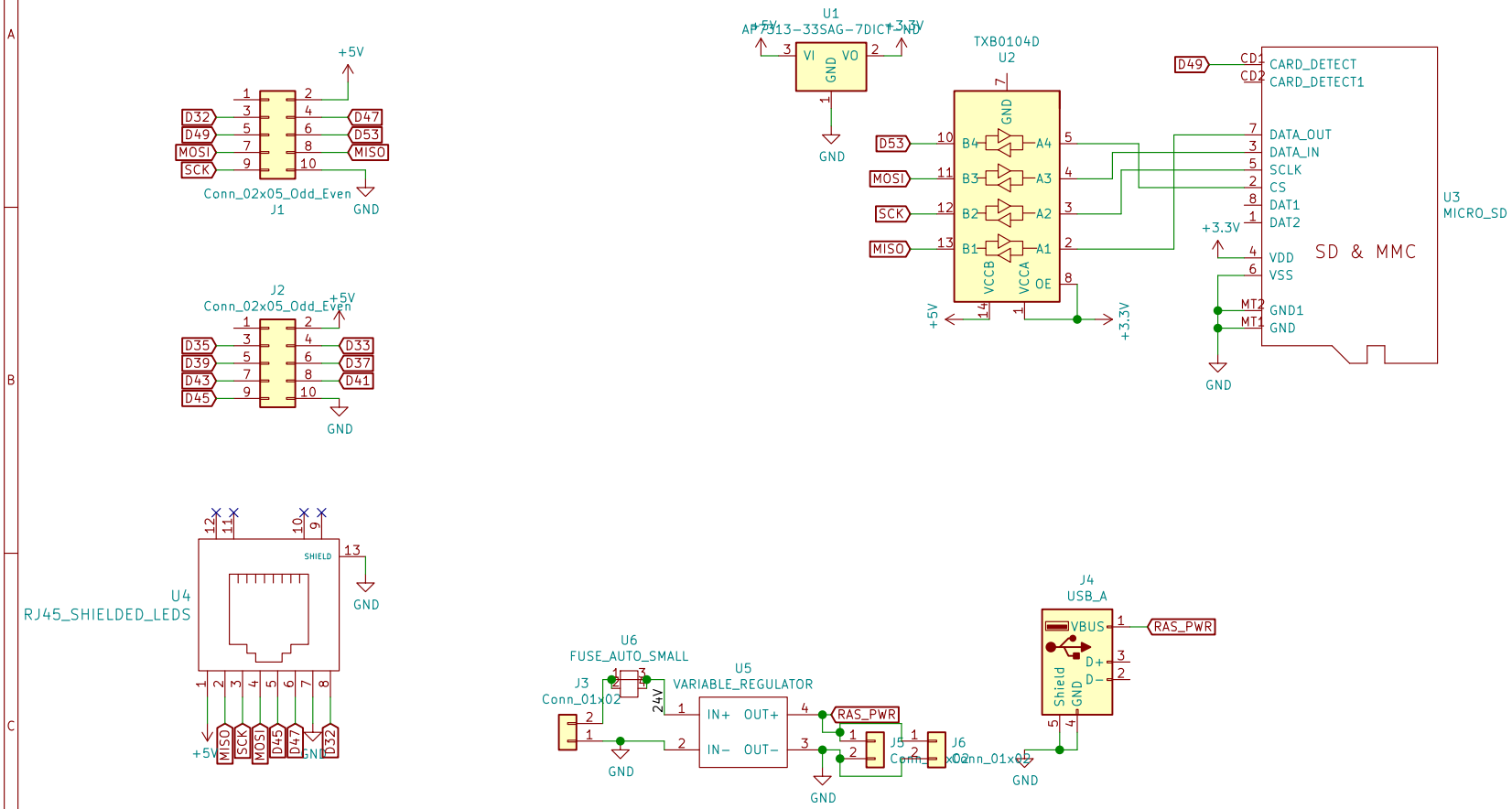

Sheet: /
File: EVEZOR SPI_POWER.sch

Title:

Size: USLetter	Date:	Rev:
KiCad E.D.A. kicad (5.0-dev-4069-g322ce84fb)		Id: 1/1