APJ ABDUL KALAM TECHNOLOGICAL UNIVERSITY

KeralaNotes

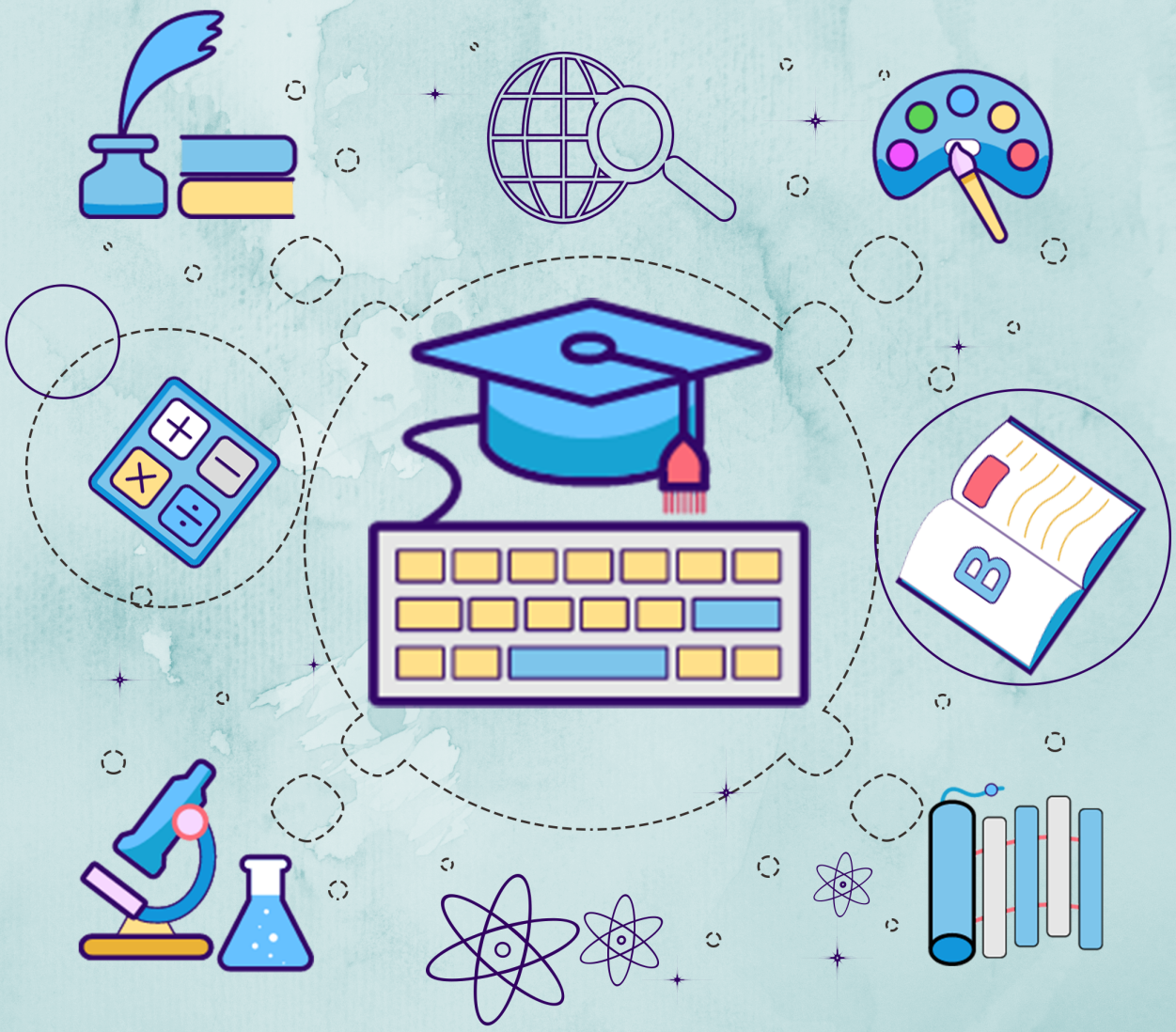

SYLLABUS | STUDY MATERIALS | TEXTBOOK PDF | SOLVED QUESTION PAPERS

www.keralanotes.com

KeralaNotes

KTU S4 CSE

COMPUTER ORGANIZATION AND ARCHITECTURE (CST 202)

QUESTION BANK

Related Link :

- KTU S4 CSE NOTES 2019 SCHEME
- KTU S4 SYLLABUS CSE COMPUTER SCIENCE
- KTU PREVIOUS QUESTION BANK S4 CSE SOLVED
- KTU CSE TEXTBOOKS S4 B.TECH PDF DOWNLOAD
- KTU S4 CSE NOTES | SYLLABUS | QBANK | TEXTBOOKS DOWNLOAD

www.keralanotes.com

MODULE 4

the disadvantages of sequential control logic?

- Large number of states
- Excessive number of flip-flops and gates
- Design methods uses state and excitation tables but in practice they are cumbersome

58. **Explain the control organization in detail.**

- **One flip-flop per state methods**

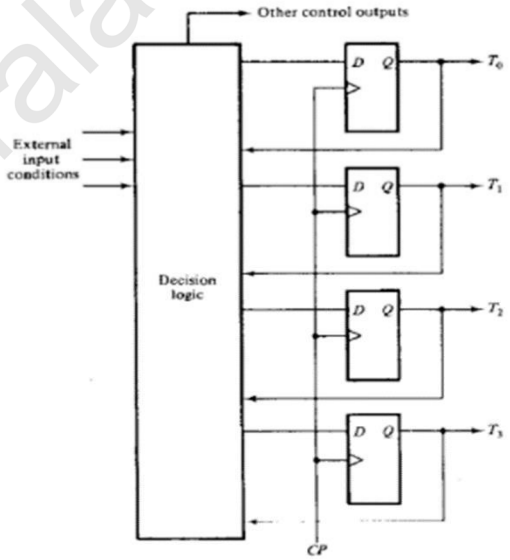

This method uses one flip-flop per state in the control sequential circuit. Only one flip-flop is set at any particular time: all others are cleared. A single bit is made to propagate from

For More Study Materials :https://www.keralanotes.com/

one flipflop to the other under the control of decision logic. In such an array, each flip-flop represents a state and is activated only when the control bit is transferred to it.

- **The advantage** of this method is the simplicity with which it can be designed.
- **The disadvantage** is that this method would increase system cost since more flip-flops are used.
- **Sequence register and decoder method**

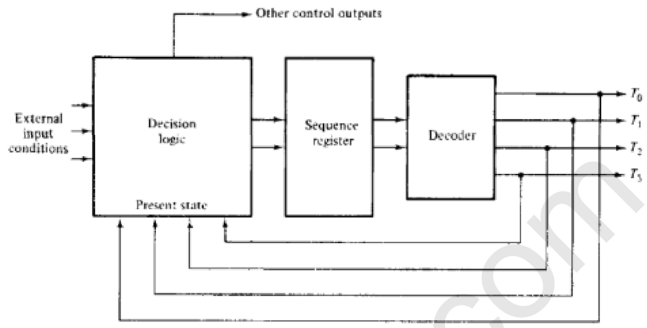

This method uses a register to sequence the control states. The register is decoded to provide one output for each state. For n flip-flops in the sequence register, the circuit will have 2" states and the decoder will have 2" outputs.

- **PLA control**

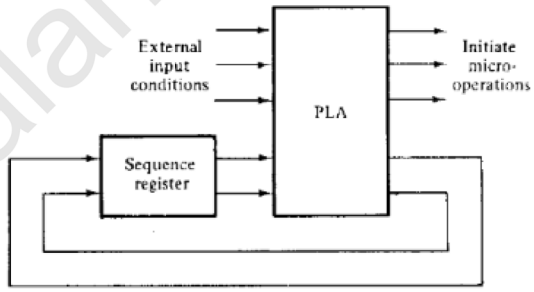

The external sequence register establishes the present state of the control circuit. The PLA outputs determine which micro-operations should be initiated depending on the external input conditions and the present state of the sequence register. At the same time other PLA outputs determine the next state of the sequence register. The sequence register is external to the PLA if the unit implements only combinational circuits

- **Micro-program control**

For More Study Materials :https://www.keralanotes.com/

Control signals are generated by a program are similar to machine language programs. The control signals associated with operations are stored in special memory units inaccessible by the programmer as Control Words (CW). A sequence of CWs corresponding to the control sequence of a machine instruction constitutes the micro routine for that instruction, and the individual control words in this micro routine are referred to as microinstructions.

59. Explain hardwired control.

The control hardware can be viewed as a state machine that changes from one state to another in every clock cycle, depending on the contents of the instruction register, the condition codes and the external inputs.

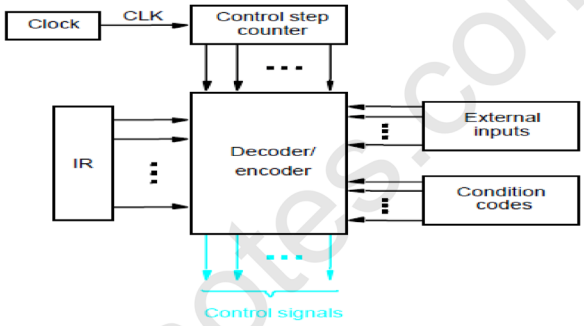

- The outputs of the state machine are the control signals. The sequence of the operation carried out by this machine is determined by the wiring of the logic elements and hence named as "hardwired". Fixed logic circuits that correspond directly to the Boolean expressions are used to generate the control signals.

60. Explain the design a hardwired control for a simple control signal with an example.

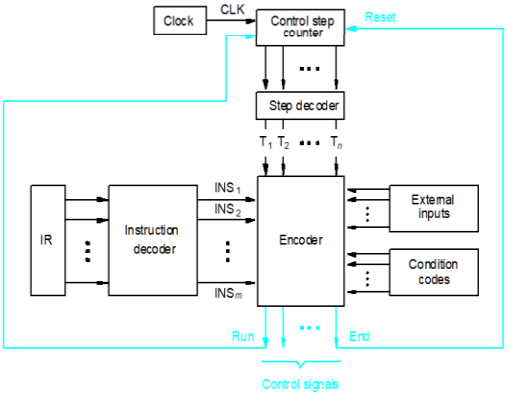

For More Study Materials :https://www.keralanotes.com/

Example

Zin=T1+T6.Add+T4.BR+…..

END= T7.Add+T5.BR+(T5.N+T4.N')BRN

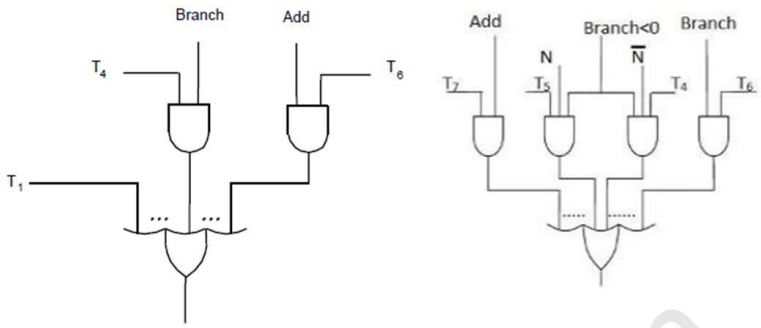

61. Explain the advantages and disadvantages of hardwired control.

Advantages: High Speed

Disadvantages: requires changes in the wiring if the design has to be modified or changed-less flexible, Costly, and difficult to implement complex instructions

62. Define the terms Control word, Micro routine, Micro instructions, Micro program, Control store.

Control Word : A control word is a word whose individual bits represent various control signals.

Micro-routine : A sequence of control words corresponding to the control sequence of a machine instruction constitutes the micro-routine for that instruction.

Micro-instruction : Individual control words in this micro-routine are referred to as microinstructions.

Micro-program : A sequence of micro-instructions is called a micro-program, which is stored in a ROM or RAM called a Control Memory (CM).

Control Store : the micro-routines for all instructions in the instruction set of a computer are stored in a special memory called the Control Store.

63. Discuss the principle operation of micro programmed control unit.

Control variables that initiate micro-operations are stored in memory. The control memory is usually a ROM, since the control sequence is permanent and needs no alteration. The control variables stored in memory are read one at a time to initiate the sequence of micro-

For More Study Materials :https://www.keralanotes.com/

operations for the system. Each micro operation is associated with a specific set of control lines which, when activated, causes that micro operation to take place.

64. Explain the components of microprogrammed control unit.

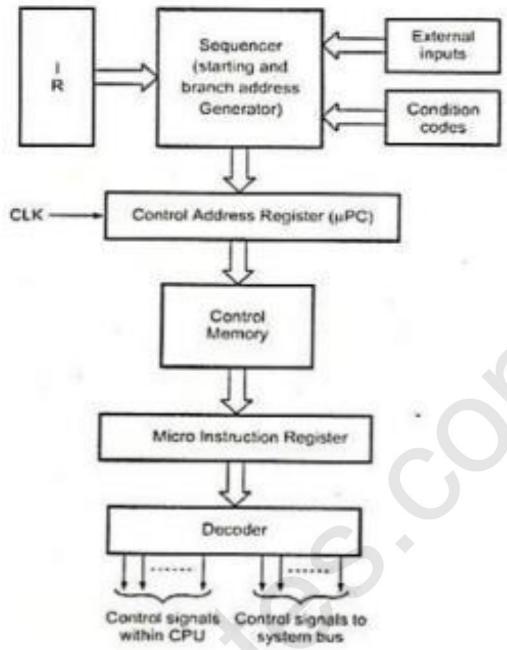

Control memory: In micro programmed control, the micro programs for all instructions are stored in the control memory (CM). The control signals to be activated at any time are specified by a microinstruction, which is fetched from Control memory (CM).

Control address register : The control address register holds the address of the next microinstruction to be read. When address is available in control address register, the sequencer issues READ command to the control memory.

Microinstruction register : After issue of READ command, the word from the addressed location is read into the microinstruction register. Now the content of the micro instruction register generates control signals and next address information for the sequencer.

Micro-program sequencer : A sequence of one or more micro operations designed to control specific operation, such as addition, multiplication is called a micro program. The sequencer loads a new address into the control address register based on the next address information

For More Study Materials :https://www.keralanotes.com/

65. List the advantages and disadvantages of microprogrammed control unit

Advantages

- It simplifies the design of control unit. Thus it is both, cheaper and less error prone implement.
- Control functions are implemented in software rather than hardware.
- The design process is orderly and systematic
- More flexible, can be changed to accommodate new system specifications or to correct the design errors quickly and cheaply.
- Complex function such as floating point arithmetic can be realized efficiently.

Disadvantages

- A micro programmed control unit is somewhat slower than the hardwired control unit, because time is required to access the microinstructions from CM
- The flexibility is achieved at some extra hardware cost due to the control memory and its access circuitry.

66. Write the control sequence and micro instructions for the instruction Add (R3), R1

1. PCout, MARin, Read, Select4, Add, Zin
2. Zout, PCin, Yin, WMFC
3. MDRout, IRin
4. R3out, MARin, Read
5. R1out, Yin, WMFC
6. MDRout, Select Y, Add, Zin
7. Zout, R1in, End

Micro - instruction	..	PC_{in}	PC_{out}	MAR_{in}	Read	MDR_{out}	IR_{in}	Y_{in}	Select	Add	Z_{in}	Z_{out}	$R1_{out}$	$R1_{in}$	$R3_{out}$	WMFC	End	..
1		0	1	1	1	0	0	0	1	1	1	0	0	0	0	0	0	
2		1	0	0	0	0	0	1	0	0	0	1	0	0	0	1	0	
3		0	0	0	0	1	1	0	0	0	0	0	0	0	0	0	0	
4		0	0	1	1	0	0	0	0	0	0	0	0	0	1	0	0	
5		0	0	0	0	0	0	1	0	0	0	0	1	0	0	1	0	
6		0	0	0	0	1	0	0	0	1	1	0	0	0	0	0	0	
7		0	0	0	0	0	0	0	0	0	0	1	0	1	0	0	1	

keralanotes.com

For More Study Materials :https://www.keralanotes.com/

67. Explain Horizontal and vertical micro instructions.

A **horizontal microinstruction** is a minimally encoded scheme. The scheme of micro-instruction by assigning one bit position to each control signal is called horizontal micro-instructions.

Example: 011101001101001110

In a horizontal microinstruction every bit in the control field attaches to a controller. Horizontal microinstructions represent several micro-operations that are executed at the same time. A horizontal approach involves a wider control store, but is capable of greater speed.

Vertical microinstruction is a tightly encoded scheme. The vertical approach requires a narrow control store, but must be decoded in order to drive the actual control lines, thus introducing a delay in driving the control lines.

F1 (4 bits)	F2 (3 bits)	F3 (3 bits)	AS3 AS2 AS1	Read	Write	Carry-in	WMFC	End
0000: No action	000: No action	000: No action	000: ADD					
0001: PCout	001: PCin	001: MARin	001: INC					
0010: MDRout	010: IRin	010: MDRin	010: SUB					
0011: Zout	011: Zin	011: TEMPin	011: DEC					
0100: R0out	100: R0in	100: Yin	100: AND					
0101: R1out	101: R1in		101: OR					
0110: R2out	110: R2in		110: XOR					
0111: R3out	111: R3in		111: NOT					
1000: IRout								
1001: TEMPout								

68. Compare Horizontal and vertical micro instructions.

Horizontal	Vertical
Long formats.	Short formats
Ability to express a high degree of parallelism.	Limited ability to express parallel micro operations.
Little encoding of the control information.	Considerable encoding of the control information
Useful when higher operating speed is desired.	Slower operating speeds.

69. Explain the design of a micro program sequencer in detail.

Micro program sequencer is a control unit which does the tasks of Micro-program sequencing.

For More Study Materials :https://www.keralanotes.com/

Micro-program sequencer is attached to the control memory.

It inspects certain bits in the microinstruction to determine the next address for control memory.

A typical sequencer has the following address sequencing capabilities.

1. Increments the present address of control memory
2. Branches to an address which will be specified in the bits of microinstruction
3. Branches to a given address if a specified status bit is equal to 1.
4. Transfers control to a new address as specified by an external source
5. Has a facility for subroutines calls and returns.

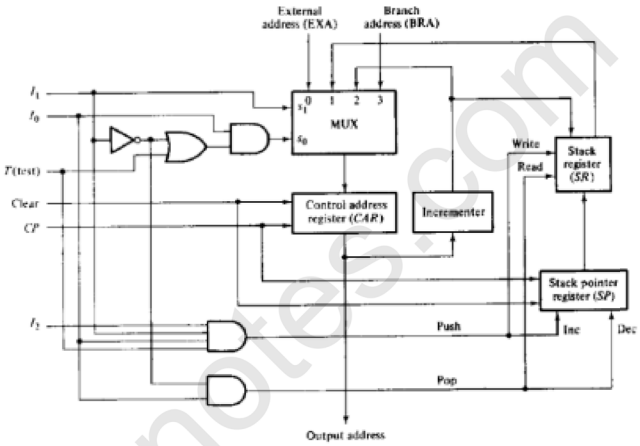

It consists of a multiplexer that selects an address from four sources and routes it into a control address register (CAR). The output from CAR provides the address for control memory. The contents of CAR are incremented and applied to the multiplexer and to the stack register file. The register selected in the stack is determined by stack pointer. Inputs (I0-I2) specify the operation for the sequencer and input T is the test point for a status bit. Initially the address register is cleared to zero and clock pulse synchronizes the loading in to registers.

70. Compare and contrast hardwired and micro programmed control units.

Hardwired control	**Microprogrammed control**
Hardwired control unit generates the control signals needed for the processor using logic circuits	Micrprogrammed control unit generates the control signals with the help of micro instructions stored in control memory
Faster	Slower

For More Study Materials :https://www.keralanotes.com/

Difficult to modify as the control signals that need to be generated are hard wired	Easy to modify as the modification need to be done only at the instruction level
More costlier as everything has to be realized in terms of logic gates	Less costlier than hardwired control as only micro instructions are used for generating control signals
It cannot handle complex instructions as the circuit design for it becomes complex	It can handle complex instructions
Only limited number of instructions are used due to the hardware implementation	Control signals for many instructions can be generated
Used in computer that makes use of Reduced Instruction Set Computers(RISC)	Used in computer that makes use of Complex Instruction Set Computers(CISC)