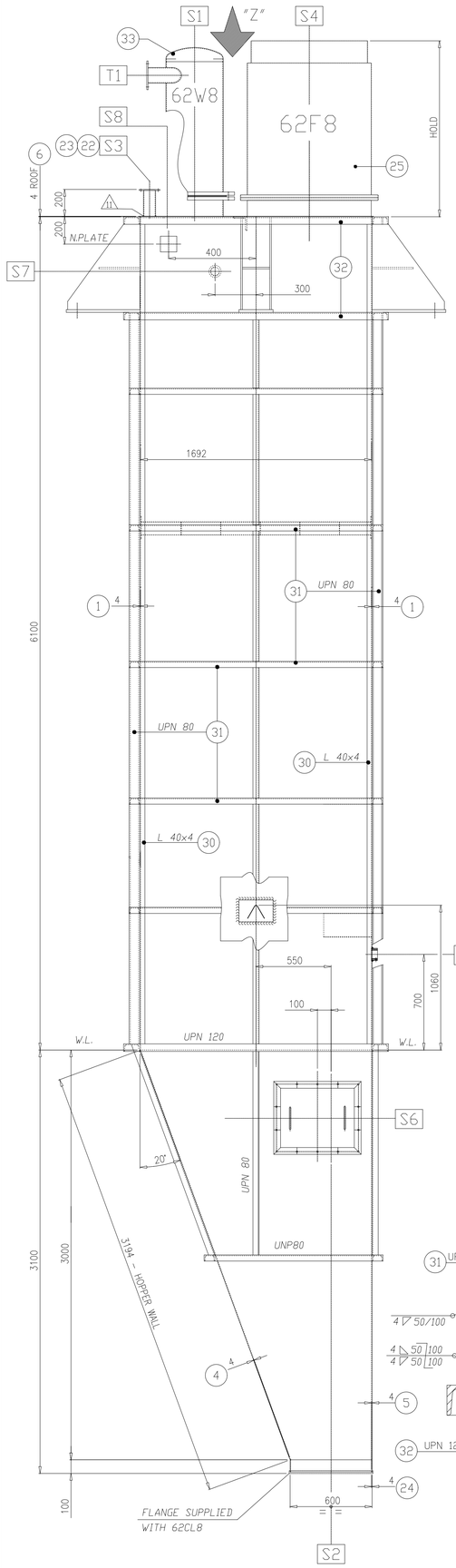

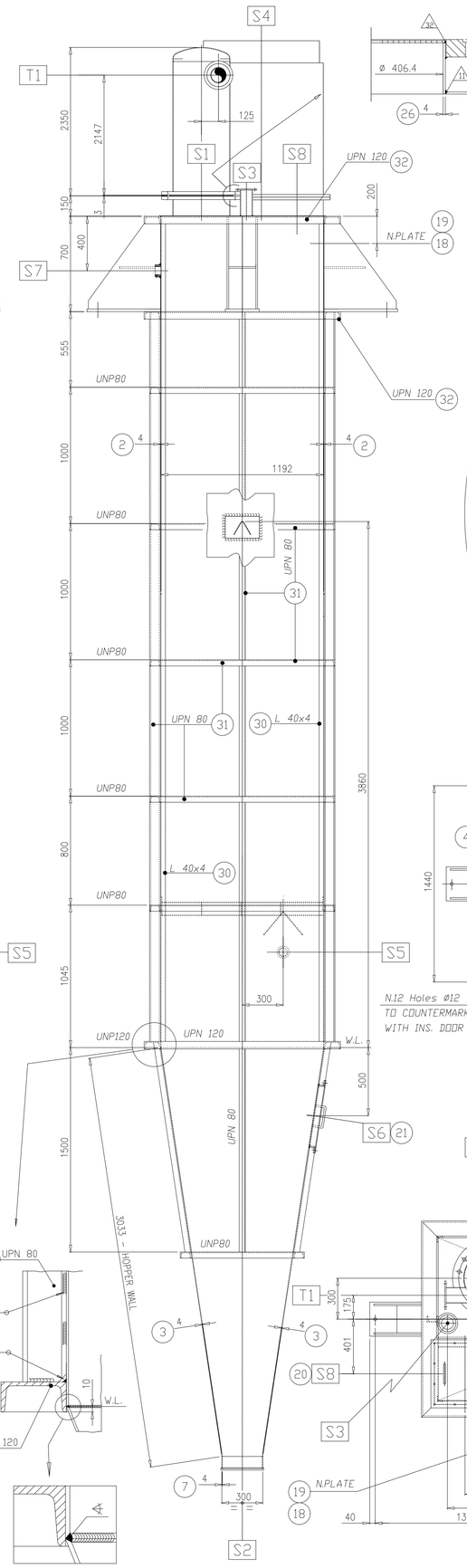

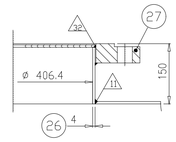

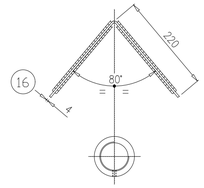

LEVEL INDICATORS DETAIL

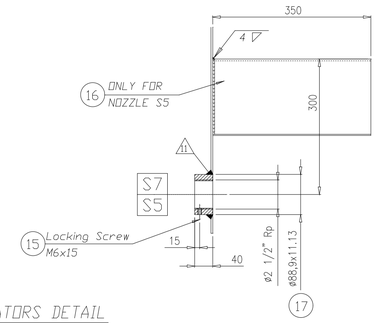

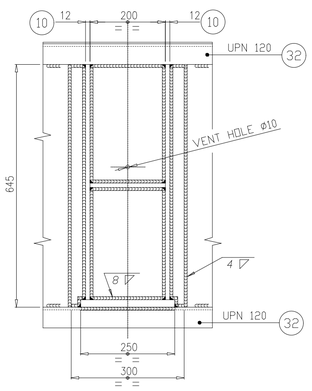

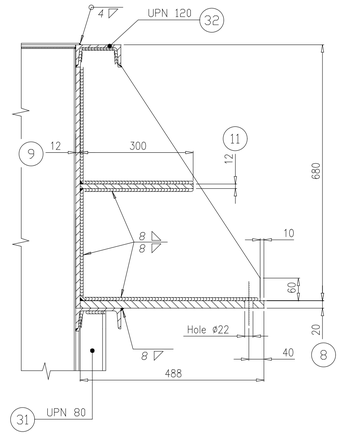

BRACKET DETAIL

N°4 PIECES

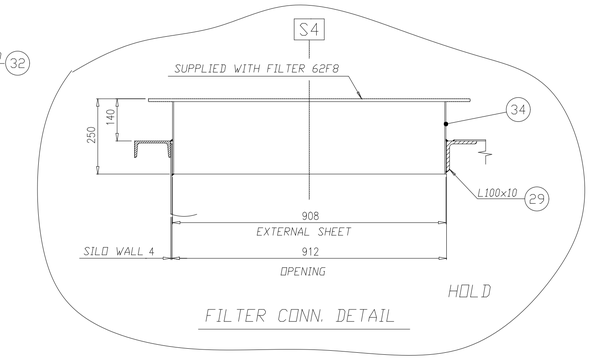

FILTER CONN. DETAIL

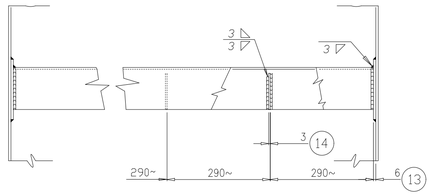

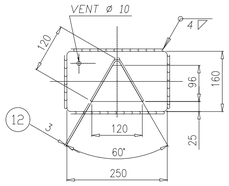

BAFFLE DETAIL

TYPICAL

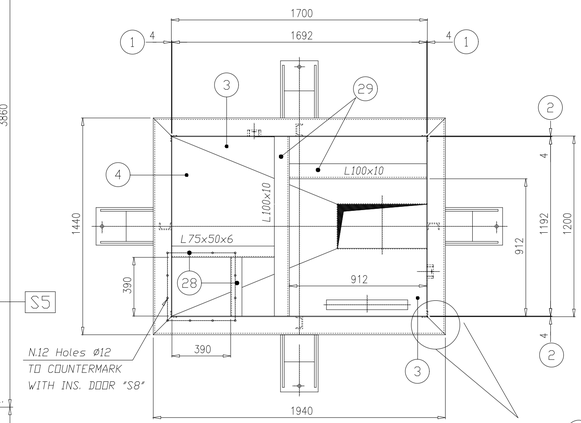

PLAN VIEW WITHOUT ROOF

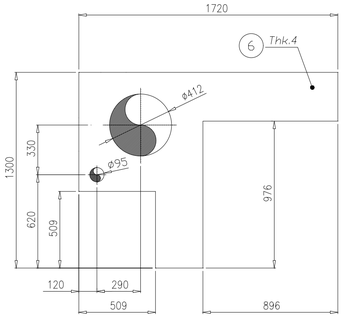

ROOF DETAIL

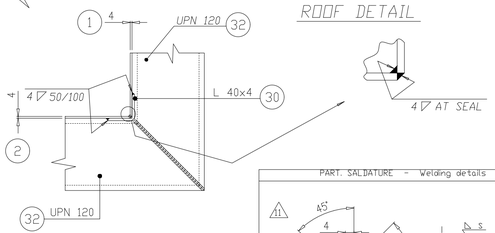

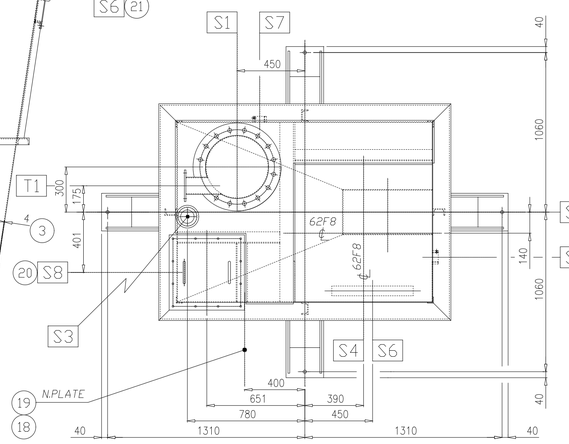

VIEW FROM "Z"

PART. SALDATURE - Welding details

PESI - Weight		
VUOTO	Empty	2630~
IN ESERCIZIO	Operating	10450~

CAPACITA' GEOMETRICA Geometric capacity	dm3	13000
SOVRASPESSORE DI CORROSIONE Corrosion allowance	mm	–
EFFICIENZA DELLE SALDATURE Joint efficiency		0,7
FLUIDO E PESO SPECIFICO Fluid and specific gravity 0.4-0.6 Kg/dm3		CMC
SUPERFICIE DI SCAMBIO TERMICO Heat exchange surface	m2	–
TEMPERATURA DI PROGETTO Design temperature	°C	65
TEMPERATURA DI ESERCIZIO Operating temperature	°C	40
PRESSIONE DI PROVA IDRAULICA Hydrostatic test pressure	Bar (g)	–
PRESSIONE DI PROGETTO Design pressure	Bar (g)	0.04 -0.04
PRESSIONE DI ESERCIZIO Operating pressure	Bar (g)	ATM -0.01
DATI DI PROGETTO Design data		62V8
ENTE COLLAUDATORE Inspection institute		CUSTOMER
NORME Code		STD. BALLESTRA

POS. Item	N	DN	PN	TIPO Type	SERVIZIO Service
T1	1	100	–	SB-ST-1104	PRODUCT INLET
S8	1	500x 500	–	SB-PRS-00237	INSPECTION DOOR
S7	1	Rp 2 1/2"	–	UNI ISO 7/1	LSH CONNECTION
S6	1	550X 450	–	SB-ST-400.032	INSPECTION DOOR
S5	1	Rp 2 1/2"	–	UNI ISO 7/1	LSL CONNECTION
S4	1	900x 900	–	AS DWG	FILTER CONNECT.
S3	1	80	–	SB-ATI-PF001	DEDUSTING
S2	1	600x 300	–	AS DWG	PRODUCT OUTLET
S1	1	400	2.5	EN 1092 - 1 01 / B1	DISTRIBUTOR CONN.
MANTELLO - Shell					
CONNESSIONI - Connection					

POS. Posit.	DENOMINAZIONE - Denomination	Nº PEZZI Pieces	DIS. DETT. Detail dwg.	MATERIALE Material	TIPO Type	DIMENSIONI FINITE Finished dimension
34	NOZZLE S4	4		A 283 Gr. C	Thk.4	250x900
33	DISTRIBUTOR	1	SB-PRS-00080	A 36		TYPE "S"
32	SHAPE	21	mt.~	A 36		UPN 120
31	SHAPE	55	mt.~	A 36		UPN 80
30	ANGLE	22	mt.~	A 36		L 40x4
29	ANGLE	2,5	mt.~	A 36		L 100x10
28	ANGLE	1,5	mt.~	A 36		L 75x50x6
27	FLANGE S1	1		A 105	EN 1092 - 1 01/B1 PN25	DN 400
26	NOZZLE S1	1		A 283 Gr. C	Lg.144	ø406.4x4
25	FILTER	1	HOLD	ACS FILTER 62F8 TYPE : SB BV 12 BM BRR		
24	PATE S2	2		A 283 Gr. C	Thk.4	292x100
23	FLANGE S3	1		A 105	SB-ATI-PF001	DN 3"
22	NOZZLE S3	1		A 283 Gr. C	Lg.194	ø88,9x3,96
21	INSPECTION DOOR S6	1	SB-ST-400032	CARBON STEEL		450x550
20	INSPECTION DOOR S8	1	SB-PRS-00237	CARBON STEEL		500x500
19	NAME PLATE HOLDER	1	SB-PRS-00121	A 283 Gr. C		
18	NAME PLATE	1	SB-PRS-00119	ALUMINIUM		
17	NOZZLE S5 - S7	2		A 106 B	Lg.40	ø88.9x11.13
16	PROTECTION BAFFLE S5	1		A 283 Gr. C	Thk.4	AS DWG
15	SCREW S5 - S7	2		CARBON STEEL	UNI 6118	M6x15
14	RIB	8		A 283 Gr. C	Thk.4	AS DWG
13	REINFORCING PLATE	4		A 283 Gr. C	Thk.6	250x160
12	BAFFLE	2		A 283 Gr. C	Thk.3	AS DWG
11	REINF.PLATE	4		A 283 Gr. C	Thk.12	200x300
10	RIB	8		A 283 Gr. C	Thk.12	AS DWG
9	REINFORCING PLATE	4		A 283 Gr. C	Thk.12	HOLDx300
8	BASE PLATE	4		A 283 Gr. C	Thk.20	488x250
7	PLATE S2	2		A 283 Gr. C	Thk.4	592x100
6	ROOF	1		A 283 Gr. C	Thk.4	AS DWG
5	HOPPER WALL	1		A 283 Gr. C	Thk.4	AS DWG
4	HOPPER WALL	1		A 283 Gr. C	Thk.4	AS DWG
3	HOPPER WALL	2		A 283 Gr. C	Thk.4	AS DWG
2	WALL	2		A 283 Gr. C	Thk.4	1692x6100
1	WALL	2		A 283 Gr. C	Thk.4	1192x6100

NOTES:

1) SEE PROJECT DATA-SHEET FOR THE APPLICABLE REVISION OF THE ATTACHEMENTS
2) GENERAL REMARK ACCORDING TO SB-PRS-SP001/0

REV.	DESCRIZIONE - Description	DIS.-Drawn	DATE
1	ISSUED FOR MATERIAL SUPPLY - ORIENTATION DEFINED	T.T.	18/04/12
0	ISSUED FOR INFORMATION	T.T.	21/03/12

THE MASTER VERSION OF THIS DOCUMENT IS STORED AS A DIGITAL FILE IN SOFTWARE ARCHIVE – APPROVAL PROCESS IS DIGITALLY MANAGED, DETAILS DO NOT SHOW ON PAPER COPIES.

L'orginale del presente documento risiede in un database per l'archiviazione digitale – il processo di approvazione è gestito via software e le firme non sono visibili sulle riproduzioni

desnet ballestra

SCALA Scale

DIS. DWG. 2F11.30.101

CLIENTE Customer
PROGETTO Project 2F11
IMPIANTO Plant SABIZ
TITOLO DIS. Title dwg. MINORS SILO

FOGLIO / DI FOGLI Sheet / of sheets 1 1

ITEM: 62V8

Ci riserviamo la proprieta' a termini di legge di questo disegno con divieto di riprodurlo anche in parte o di renderlo noto a terzi senza nostra autorizzazione scritta.
We reserve the ownership under the law of this drawing with prohibition of even partial reproduction and to make it known to third persons without our written authorization.