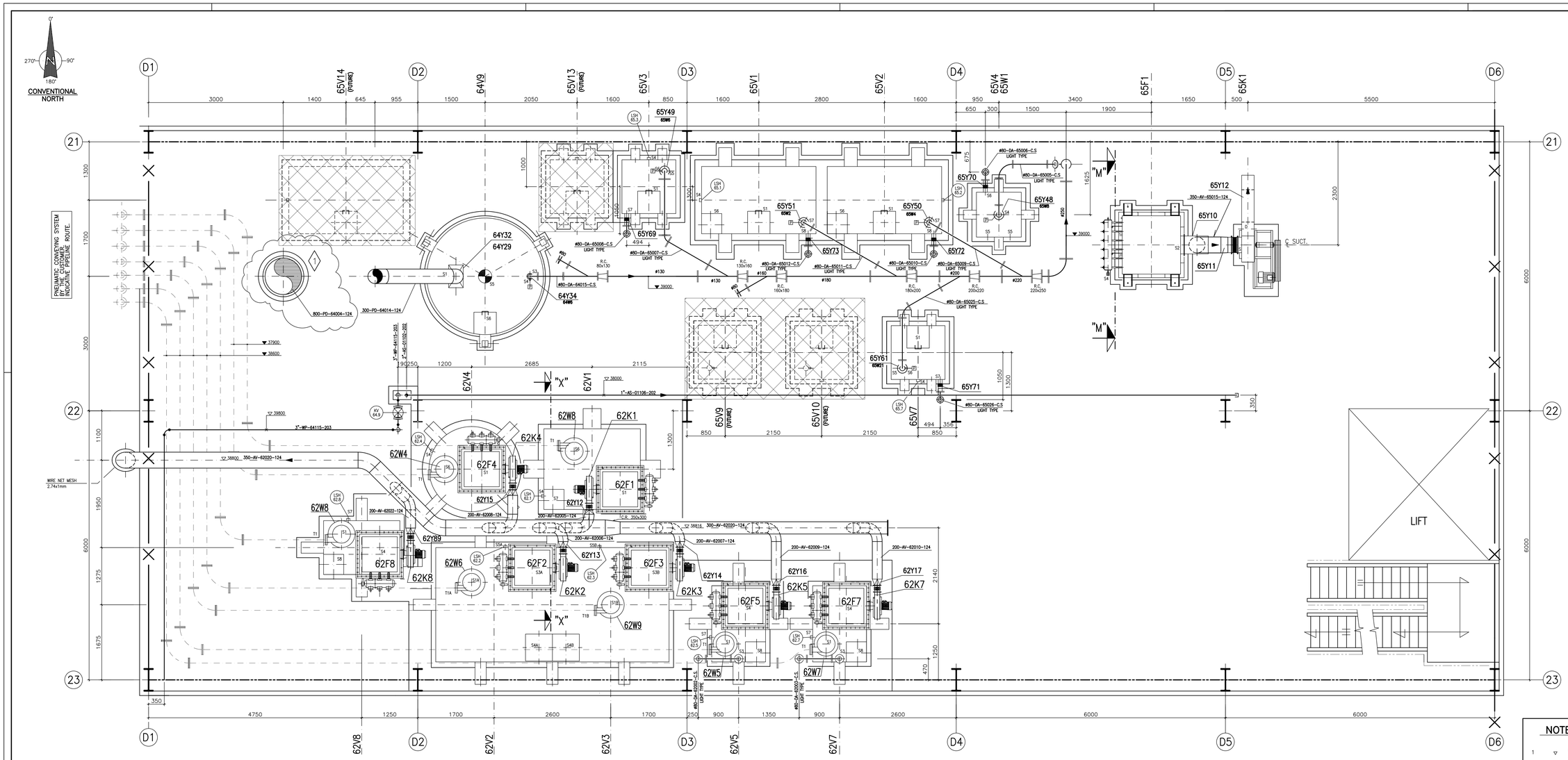

● SUPPLIED WITH COUNTER FLANGE, BOLTS AND GASKETS

NOZZLE CHART

EQUIPMENTS ITEM / FOUNDATION ELEVATION	POS.	SIZE	RATING	DIST. FROM EQUIP.	COORDINATES NORTH	COORDINATES EAST	COORDINATES ELEV.	ORIENTATION HORIZON. ° 0°=NORTH	ORIENTATION VERTIC. ° 0°=UP 180°=DOWN	NOTES
62F1 62K1 ▽ 36440	S	Ø..	AS DWG.	...			.....	90°	90°	SUCTION
	D	●" ..	AS DWG.	...			.....	180°	90°	DISCHARGE
62F2 62K2 ▽ 36440	S	Ø..	AS DWG.	...			.....	270°	90°	SUCTION
	D	●" ..	AS DWG.	...			.....	0°	90°	DISCHARGE
62F3 62K3 ▽ 36440	S	Ø..	AS DWG.	...			.....	270°	90°	SUCTION
	D	●" ..	AS DWG.	...			.....	0°	90°	DISCHARGE
62F4 62K4 ▽ 36460	S	Ø..	AS DWG.	...			.....	270°	90°	SUCTION
	D	●" ..	AS DWG.	...			.....	180°	90°	DISCHARGE
62F5 62K5 ▽ 36440	S	Ø..	AS DWG.	...			.....	270°	90°	SUCTION
	D	●" ..	AS DWG.	...			.....	0°	90°	DISCHARGE
62F7 62K7 ▽ 36440	S	Ø..	AS DWG.	...			.....	270°	90°	SUCTION
	D	●" ..	AS DWG.	...			.....	0°	90°	DISCHARGE
62F8 62K8 ▽ 36440	S	Ø..	AS DWG.	...			.....	270°	90°	SUCTION
	D	●" ..	AS DWG.	...			.....	0°	90°	DISCHARGE
62V1 ▽ 35600	S1	800/600	AS DWG.	SEE PLAN			36454	SEE PLAN	0°	FILTER CONNECTION
	S4	3/4"/1/2"	UNI ISO 7/1	800/1125~			35900	270°	90°	LSH CONNECTION
	S6	400/400	DN1092-1 tt.01/01 PN 25	400/400			36454	SEE PLAN	0°	DISTRIBUTOR CONN.
	S7	500/500	AS DWG.	701/878			36304	SEE PLAN	0°	INSPECTION DOOR
	T1	100	–	525/750			37904	270°	90°	PRODUCT INLET
62V2–V3 ▽ 35600	S1A	400	DN1092-1 tt.01/01 PN 25	1800/500			36444	270°	0°	DISTRIBUTOR CONN.
	S1B	400	DN1092-1 tt.01/01 PN 25	1300/500			36444	90°	0°	DISTRIBUTOR CONN.
	S3A/B	500/500	AS DWG.	SEE PLAN			36444	SEE PLAN	0°	FILTER CONNECTION
	S4A/B	500/500	AS DWG.	36304			36304	180°	0°	INSPECTION DOOR
	S5A/B	3/4"/1/2"	UNI ISO 7/1	1325/1050			35900	0°	90°	LSH CONNECTION
	T1A	100	–	2150/500			38607	270°	90°	PRODUCT INLET
	T1B	100	–	950/125			38907	270°	90°	PRODUCT INLET
62V4 ▽ 35600	S1	800/600	AS DWG.	225			36456	SEE PLAN	0°	FILTER CONNECTION
	S4	3/4"/1/2"	UNI ISO 7/1	1000~			35900	295°	90°	LSH CONNECTION
	S6	400	DN1092-1 tt.01/01 PN 25	700			36456	270°	0°	DISTRIBUTOR CONN.
	T1	100	–	1050/125			37906	270°	90°	PRODUCT INLET
62V5 ▽ 35600	S1	400	DN1092-1 tt.01/01 PN 25	450/300			36454	SEE PLAN	0°	DISTRIBUTOR CONN.
	S3	80	SB-ATI-PP001	780			36504	180°	0°	DEDUSTING
	S4	800/600	AS DWG.	390			36454	SEE PLAN	0°	FILTER CONNECTION
	S7	3/4"/1/2"	UNI ISO 7/1	300/650~			35900	270°	90°	LSH CONNECTION
	S8	500/500	–	651/401			36300	SEE PLAN	0°	INSPECTION DOOR
	T1	100	–	650/575			38604	270°	90°	PRODUCT INLET

NOZZLE CHART

EQUIPMENTS ITEM / FOUNDATION ELEVATION	POS.	SIZE	RATING	DIST. FROM EQUIP.	COORDINATES NORTH	COORDINATES EAST	COORDINATES ELEV.	ORIENTATION HORIZON. ° 0°=NORTH	ORIENTATION VERTIC. ° 0°=UP 180°=DOWN	NOTES
62V7 ▽ 35600	S1	400	DN1092-1 tt.01/01 PN 25	450/300			36454	SEE PLAN	0°	DISTRIBUTOR CONN.
	S3	80	SB-ATI-PP001	780			36504	180°	0°	DEDUSTING
	S4	800/600	AS DWG.	SEE PLAN			36454	SEE PLAN	0°	FILTER CONNECTION
	S7	3/4"/1/2"	UNI ISO 7/1	300/650~			35900	270°	90°	LSH CONNECTION
	S8	500/500	–	651/401			36300	SEE PLAN	0°	INSPECTION DOOR
	T1	100	–	650/575			38604	270°	90°	PRODUCT INLET
62V8 ▽ 35600	S1	400	DN1092-1 tt.01/01 PN 25	450/300			36453	AS DWG.	0°	DISTRIBUTOR CONN.
	S4	800/600	AS DWG.	AS DWG.			36453	AS DWG.	0°	FILTER CONNECTION
	S7	3/4"/1/2"	UNI ISO 7/1	300/650~			35900	0°	90°	LSH CONNECTION
	S8	500/500	–	651/401			36300	AS DWG.	0°	INSPECTION DOOR
	T1	100	–	300/750			38603	270°	90°	PRODUCT INLET
64V9 ▽ 35600	S1	2X400	AS DWG.	650			36506	270°	0°	PRODUCT INLET
	S3	Ø±80	AS DWG.	1000			36606	90°	0°	DEDUSTING
	S4	1/4"/1/2"	ASME B1.20.1 NPT 3000#	1000			36456	180°	90°	P CONNECTION
	S5	–	AS DWG.	℄			36435	℄	0°	STIRRER CONN.
	S6	500/500	AS DWG.	1000			36420	180°	0°	HINGED DOOR
	S2	400/500	AS DWG.	730			37494	90°	90°	AIR OUTLET
65F1 ▽ 35600 ●	S4	1/2"/NPT	–	–			37340	180°	90°	COMPRESSED AIR INLET
65K1 ▽ 35600	S	Ø345	AS DWG.	225			36200	270°	90°	SUCTION
	D	2"/1/2"	AS DWG.	375			36575	0°	0°	DISCHARGE
65V1 ▽ 35600	S1	500/500	AS DWG.	496			36400	180°	0°	MANUAL CHARGING
	S4	3/4"/1/2"	UNI ISO 7/1	1325~			35800	270°	90°	LSH CONNECTION
	S6	500/500	–	1076/551			36400	SEE PLAN	0°	INSPECTION DOOR
	S7	Ø±80	AS DWG.	1000/500			36550	SEE PLAN	0°	DEDUSTING
	S8	Ø±80	AS DWG.	850/1100			36250	SEE PLAN	0°	DEDUSTING
65V2 ▽ 35600	S1	500/500	AS DWG.	496			36400	180°	0°	MANUAL CHARGING
	S4	3/4"/1/2"	UNI ISO 7/1	1325~			35800	90°	90°	LSH CONNECTION
	S6	500/500	–	1076/551			36400	SEE PLAN	0°	INSPECTION DOOR
	S7	Ø±80	AS DWG.	1000/500			36550	SEE PLAN	0°	DEDUSTING
	S8	Ø±80	AS DWG.	850/1100			36250	SEE PLAN	0°	DEDUSTING
65V3 ▽ 35600	S1	500/500	AS DWG.	SEE PLAN			36500	180°	0°	MANUAL CHARGING
	S4	3/4"/1/2"	UNI ISO 7/1	650~			36100	0°	90°	LSH CONNECTION
	S5	Ø±80	AS DWG.	350/350			36703	SEE PLAN	0°	DEDUSTING
	S6	1/4"F	ASME B1.20.1 NPT 3000#	SEE PLAN			36603	SEE PLAN	90°	P CONNECTION
	S7	Ø±80	AS DWG.	700			36350	SEE PLAN	90°	DEDUSTING
65W1 65V4 ▽ 35600	S1	100/100	AS DWG.	℄			36200	℄	0°	PRODUCT INLET
	S4	Ø±80	AS DWG.	℄			37900	℄	0°	DEDUSTING
	S5	–	AS DWG.	500			–	180°	90°	CHARGING
	S6	Ø±80	AS DWG.	300			36080	SEE PLAN	90°	DEDUSTING
65V7 ▽ 35600	S1	500/500	AS DWG.	SEE PLAN			36500	0°	0°	MANUAL CHARGING
	S4	3/4"/1/2"	UNI ISO 7/1	650~			36100	180°	90°	LSH CONNECTION
	S5	Ø±80	AS DWG.	350/350			36700	SEE PLAN	0°	DEDUSTING
	S6	1/4"F	ASME B1.20.1 NPT 3000#	SEE PLAN			36600	SEE PLAN	90°	P CONNECTION
	S7	Ø±80	AS DWG.	494			36350	SEE PLAN	0°	DEDUSTING

PLAN FROM ▽35500 TO ▽40500

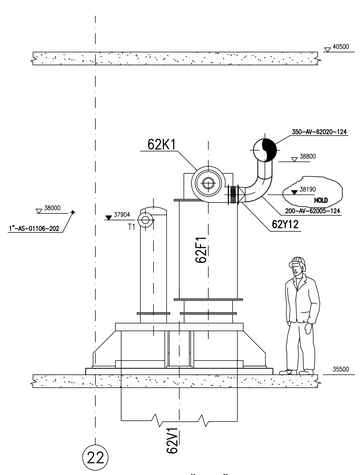

SECTION "X–X"

FUTURE

REFERENCE DRAWINGS

DESCRIPTION DRAWINGS	NUMBER DRAWINGS
PLOT PLAN	2F11–20–101
FOUNDATION PLAN	2F11–55–101
KEY–PLAN	2F11–60–100
P.& I. DIAGRAM – SOLID PROPORTIONING – SECTION 62	2F11–10–103 SH.1
P.& I. DIAGRAM – OFF. SPEC. POWDER DISSOLVING/RECOVERING – SECTION 62	2F11–10–103 SH.2
P.& I. DIAGRAM – SLURRY PREPARATION – SECTION 62/63	2F11–10–104 SH.1
P.& I. DIAGRAM – SLURRY HOMOGENEIZING AND PUMPING – SECTION 63	2F11–10–104 SH.2
P.& I. DIAGRAM – SPRAY DRYING – SECTION 64	2F11–10–105 SH.1
P.& I. DIAGRAM – ZEOLITE DOSING TO SPRAY–DRYING TOWER – SECTION 64	2F11–10–105 SH.2
P.& I. DIAGRAM – CONTINUOUS POST BLENDING – SECTION 65	2F11–10–106 SH.1
P.& I. DIAGRAM – PACKAGING SYSTEM – SECTION 65	2F11–10–106 SH.2
UTILITIES PLANIMETRIC DIAGRAM	2F11–12–101
PIPING CONNECTION FOR INSTRUMENT	SB–ATI–PV001/0
INSULATION SPECIFICATION	SB–ATI–SP030/0
WATER TRACINGS SPECIFICATION	SB–ATI–SP037/0
STEAM TRACINGS SPECIFICATION	SB–ATI–SP036/0
SKETCHES FOR DEDUSTING NETWORK	2F11–60–110
"Y" PIECES LIST –	2F11–65–113
PIPING SUPPORT LAY–OUT AREA 1	2F11–60–109

NOTE GENERALI – GENERAL NOTES

1 ▽ ELEVAZIONE FONDO TUBO O ELEVAZIONE GENERICA.
ELEVATION TO PIPE BOTTOM OR GENERAL ELEVATION.

2 ▼ *ELEVAZIONE ASSE TUBO.*
ELEVATION TO PIPE CENTERLINE.

3 ELEVAZIONE ASSE VALVOLA.
ELEVATION TO VALVE CENTERLINE.

4 ELEVAZIONE FACCIA INFERIORE FLANGIA.
ELEVATION TO BOTTOM FACE OF FLANGE.

5 ELEVAZIONE FACCIA SUPERIORE FLANGIA.
ELEVATION TO TOP FACE OF FLANGE.

6 TUTTE LE QUOTE SONO RIFERITE ALL'ELEVAZIONE D'IMPIANTO ▽0.00 CORRISPONDENTE A (mt.....S.L.M.)
ALL VERTICAL DIMENSIONS ARE REFERRED TO PLANT ELEVATION ▽0.00 CORRESPONDING TO (mt.....A.S.L.)

7 PREVEDERE SFIATI SUI PUNTI ALTI E DRENAGGI NEI PUNTI PIU' BASSI DELLE TUBAZIONI.
GLI SFIATI E I DRENAGGI PER LE LINEE DN <= 65 (2½") DOVRANNO ESSERE DA DN 15 (1/2").
GLI SFIATI E I DRENAGGI PER LE LINEE DN >= 80 (3") DOVRANNO ESSERE DA DN 20 (3/4").
PROVIDE VENTS AT HIGHEST POINT AND DRAINS AT LOWEST POINTS OF LINES.
VENTS AND DRAINS FOR THE LINES DN <= 65 (2½") WILL HAVE TO BE DN 15 (1/2").
VENTS AND DRAINS FOR THE LINES DN >= 80 (3") WILL HAVE TO BE DN 20 (3/4").

8 I COLLEGAMENTI DELLE TUBAZIONI DEI SERVIZI CON DN <= 15 (1/2") TRA I COLLETTORI E LE APPARECCHIATURE O LE INCAMICIATURE (FATTA ECCEZIONE PER LE APPARECCHIATURE E LE TUBAZIONI DELLO ZOLFO) DOVRANNO ESSERE STABILITI IN CANTIERE E NON SONO, PERTANTO, INDICATI SULLA TAVOLA DI MONTAGGIO.
THE CONNECTIONS OF UTILITIES PIPES DN <= 15 (1/2") BETWEEN MANIFOLDS AND EQUIPMENTS OR JACKETED PIPES (WITH EXCEPTION OF SULPHUR EQUIPMENTS AND PIPES) SHALL BE ESTABLISHED ON SITE AND THEREFORE ARE NOT INDICATED ON THE PIPING ARRANGEMENT DRAWINGS.

9 TUTTE LE DIMENSIONI SONO IN mm. SALVO DIVERSAMENTE INDICATO.
ALL DIMENSIONS ARE IN mm. UNLESS OTHERWISE INDICATED.

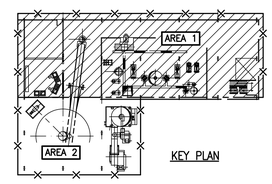

KEY PLAN

REVISION Revisione	REVISION HISTORY Storia delle revisioni	DRAWN Autore	DATE Data
1	REVISED WHERE INDICATED	M.B.	17.09.2012
0	ISSUED FOR CONSTRUCTION	M.B.	27.06.2012

The master version of this document is stored as a digital file in a database. Approval process is digitally managed and no signature is visible on the document. L'originale del presente documento risiede in un database digitale.Il processo di approvazione è gestito via software e le firme non sono visibili sul documento.

desmet ballestra

Desmet Ballestra s.p.a.
MILANO - Italy

DRAWING Nr. / Disegno Nr.: 2F11-60-101-8
CUSTOMER Nr. / Nr. Cliente: -

JOB Commessa	2F11	SHEET Foglio	8 / 11
PLANT Impianto	SABIZ	SHEET REVISION Revisione Foglio	1
TITLE Titolo	PIPING ARRANGEMENT AREA "1" PLAN EL. 35.500 TO 40.500	SCALE Scala 1:33	-
		SECTION Sezione	-

We reserve the ownership under the law of this drawing with prohibition of even partial reproduction and to make it known it third persons without our written authorization. Ci riserviamo la proprietà a termini di legge di questo disegno con divieto di riprodurlo anche in parte o di renderlo noto a terzi senza nostra autorizzazione scritta.