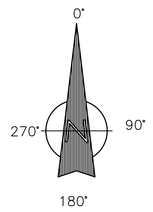

CONVENTIONAL

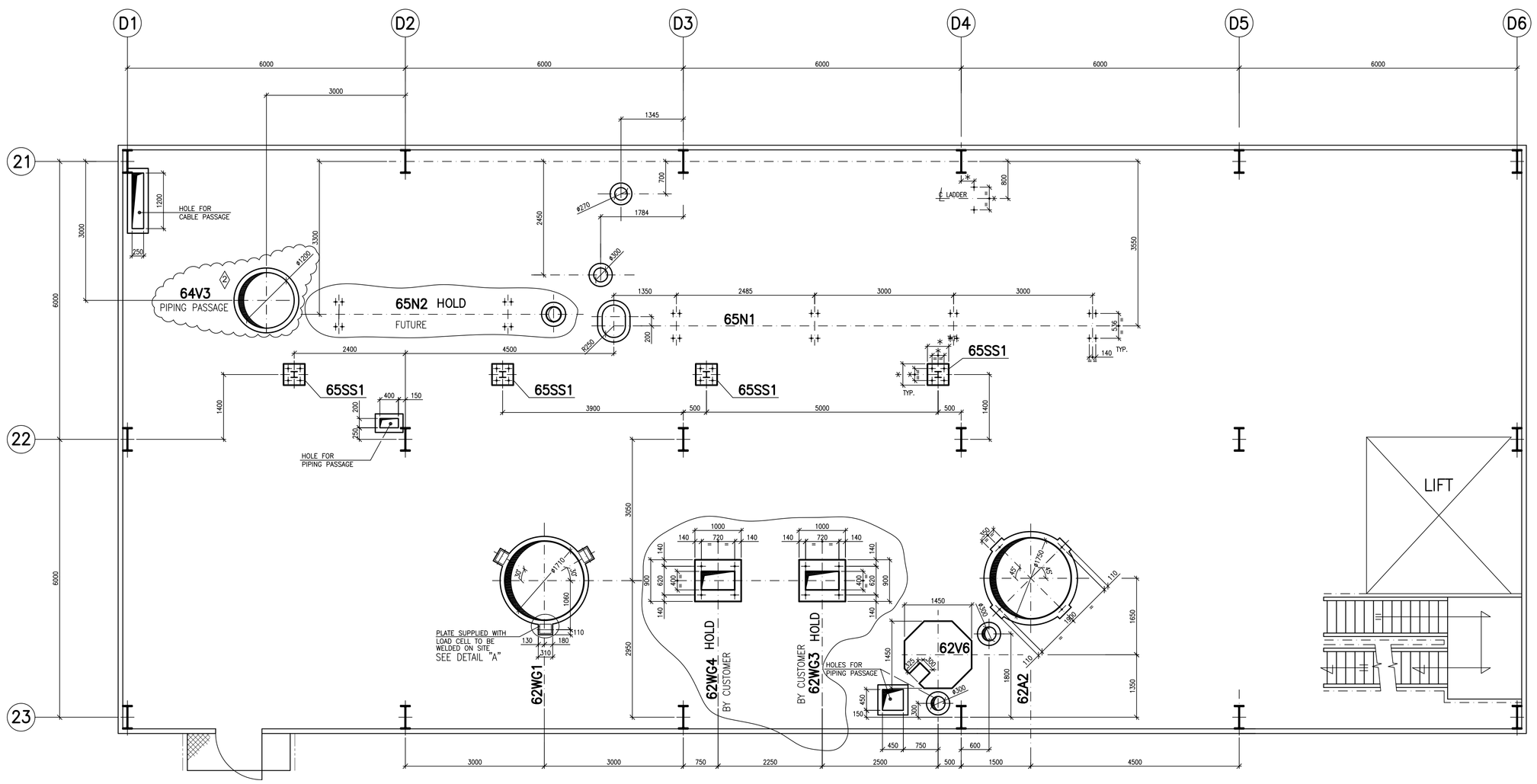

PLAN ▽ 25500

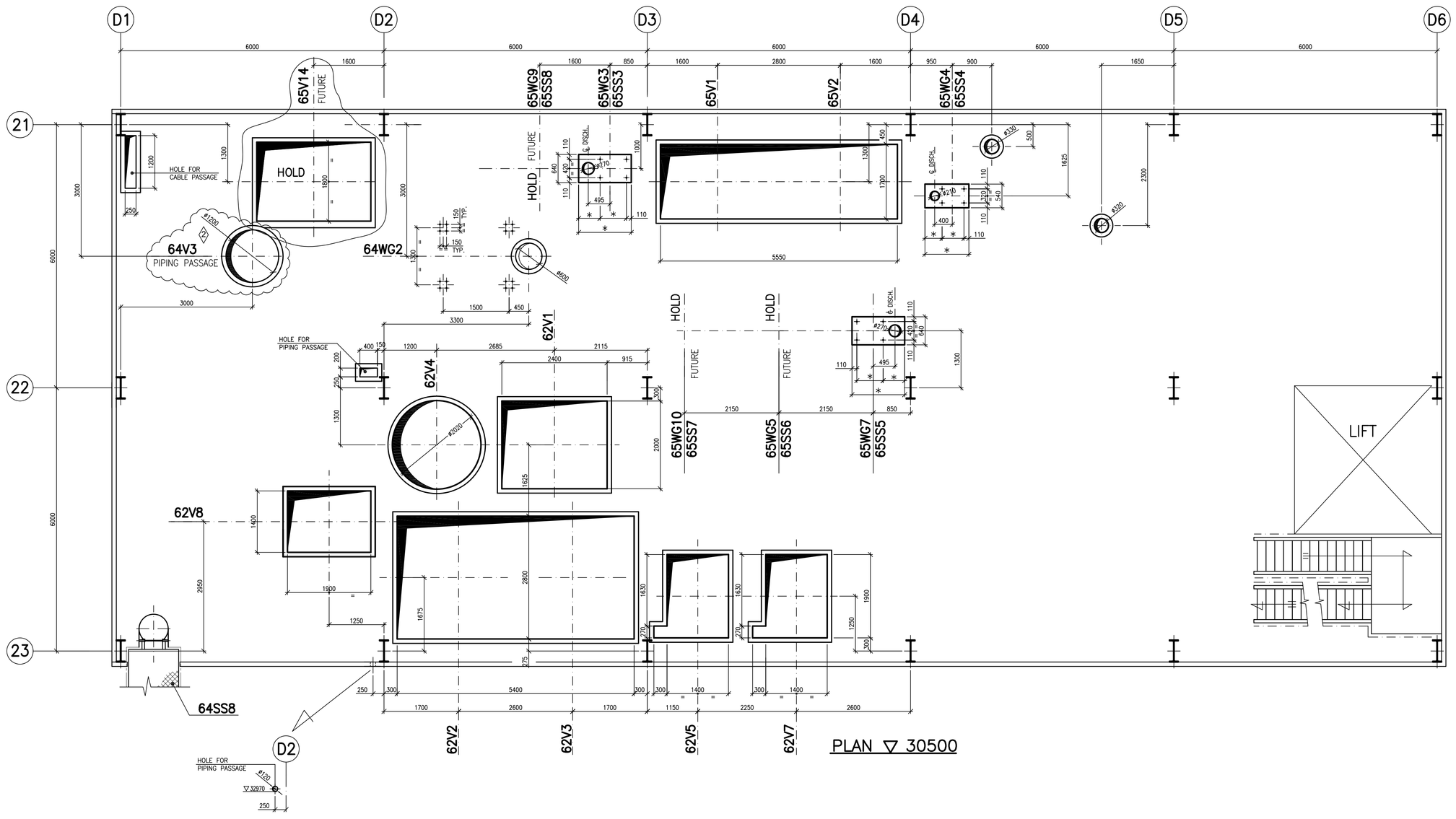

PLAN ▽ 30500

REFERENCE DRAWINGS

DESCRIPTION DRAWINGS	NUMBER DRAWINGS
PLOT PLAN EL. 15500–20500–25500	2F11–20–101–3
PLOT PLAN EL. 30500–35500–40500	2F11–20–101–4
ANCHOR BOLTS	SB–ATI–SP059
ANCHOR BOLTS SUMMARY	2F11–65–112

TYPE: STA.=STATIC LOAD
VIB.=VIBRATING LOAD

M=MOMENTO (Moment)
Q=CARICO (Loads)
T=TAGLIO (Shear)

BASE PLATE ELEVATION – BOLTS AND LOADS TABLE

	EQUIPMENT ITEM	TOP GROUT ELEV.	FOUND. BOLTS SB–ATI–SP059 QTY.	TYP.	DIAM.	P	NUTS QTY.	L+P	LOADS EMPTY Q Kg	T Kg	M Kgm	FULL OF WATER Q Kg	T Kg	M Kgm	OPERATING Q Kg	T Kg	M Kgm	TYPE
	62A2	25600	4	3	M20	135	12	445	1000			4050			4040			VIB
	62V6	25800	/	/	/	/	/	/	570			2900			2550			STA
	62WG1	25600	/	/	/	/	/	/	800			/			3900			STA
HOLD BY CUSTOMER	62WG3	25600	4	4	M16	15	/	40	110			/			130			STA
HOLD BY CUSTOMER	62WG4	25600	4	4	M16	15	/	40	110			/			130			STA
	64SR1	UNDER 30500	SEE DETAIL B						1000			/			2200			VIB
	64WG2	30500	16	4	M12	15	/	40	1100			/			1320			VIB
	65N1	25500	16	4	M16	15	/	40	870			/			1050			VIB
	65SS1	25600	–	–	–	–	–	–	–			/			–			STA
	65SS3	30600	–	–	–	–	–	–	–			/			–			STA
	65SS4	30600	–	–	–	–	–	–	–			/			–			STA
	65WG1 ○	ZT850 T.O.S.	16	5	M12	50	32	60	600			/			720			VIB
	65WG2 ○	ZT850 T.O.S.	16	5	M12	50	32	60	600			/			720			VIB
	65WG3	30600	–	–	–	–	–	–	250			/			300			VIB
	65WG4	30600	–	–	–	–	–	–	150			/			180			VIB
HOLD FUTURE	65WG8 ○	ZT850 T.O.S.	4	5	–	–	–	–	600			/			720			VIB
HOLD FUTURE	65N2	25500	–	–	–	–	–	–	–			/			–			VIB
	65SS5	30600	–	–	–	–	–	–	–			/			–			STA
FUTURE	65SS6	30600	–	–	–	–	–	–	–			/			–			STA
FUTURE	65SS7	30600	–	–	–	–	–	–	–			/			–			STA
FUTURE	65SS8	30600	–	–	–	–	–	–	–			/			–			STA
HOLD FUTURE	65WG5	30600	–	–	–	–	–	–	250			/			300			VIB
	65WG7	30600	–	–	–	–	–	–	250			/			300			VIB
HOLD FUTURE	65WG9	30600	–	–	–	–	–	–	250			/			300			STA
HOLD FUTURE	65WG10	30600	–	–	–	–	–	–	250			/			300			VIB

○ ON STRUCTURE 65SS1

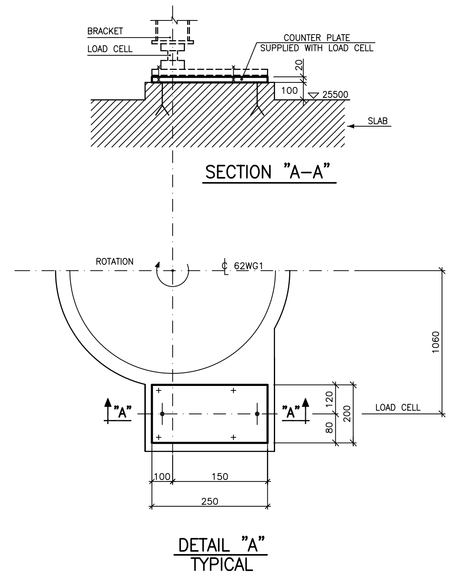

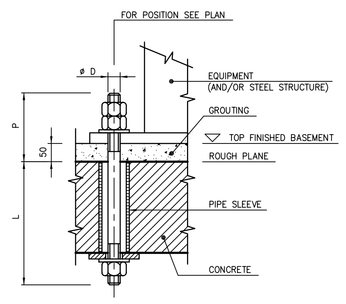

TYPICAL DETAIL FOR FOUNDATIONS BOLT
TYPE ③ SB–ATI–SP059

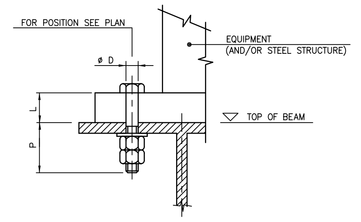

TYPICAL DETAIL FOR FOUNDATIONS BOLT
TYPE ⑤ SB–ATI–SP059

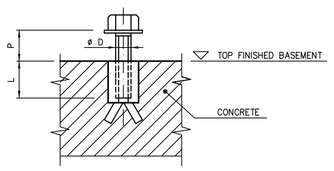

TYPICAL DETAIL FOR FOUNDATIONS BOLT
TYPE ④ SB–ATI–SP059

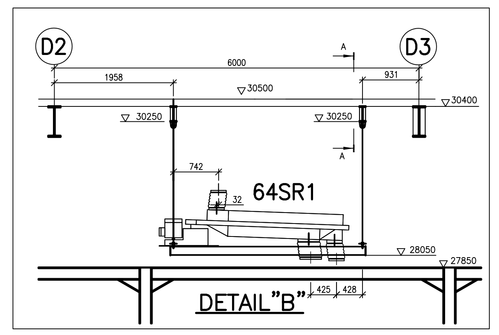

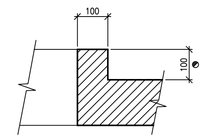

TYPICAL

A PROTECTION CURB TO BE PROVIDED ON ALL THE HOLES CROSSING THE CONCRETE FLOORS .
FOR THE CURBS LOCATED OUTSIDE THE BUILDING IN THE UPPER PART CONSIDER 150 mm .

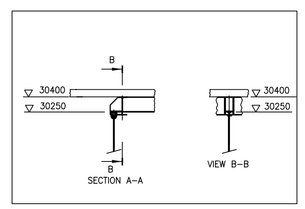

NOTE GENERALI

GENERAL NOTES

1) **TUTTE LE QUOTE IN ELEVAZIONE SONO RIFERITE ALLO 0.00 DELLL'IMPIANTO, CORRISPONDENTE ALLA MASSIMA ELEVAZIONE DEL PAVIMENTO FINITO (mt. 15 S.L.M.).**

1) ALL ELEVATION ARE REFERED TO PLANT ELEVATION 0.00, CORRISPONDING TO MAXIMUM FINISHED PAVING ELEVATION (mt. 15 ABOVE SEA LEVEL).

2) **I CARICHI IN ESERCIZIO INDICATI IN TABELLA PER APPARECCHIATURE E MACCHINE VIBRANTI SONO MAGGIORATI IN BASE AL COEFFICIENTE DINAMICO.**

2) THE LOAD OPERATING FOR VIBRATING EQUIPMENTS AND MACHINES INDICATED IN THE TABLE HAVE BEEN INCREASED ACCORDING TO THE DYNAMIC COEFFICIENT.

3) **TUTTI I FERRI E LE PIASTRE INDICATI NELLA PIANTA FONDAZIONI SONO A CARICO DEL CLIENTE.**

3) ALL STRUCTURAL SHAPES AND PLATES SHOWN ON THIS FOUNDATIONS PLAN ARE CUSTOMER'S CHARGE.

4) **TUTTE LE DIMENSIONI SONO IN mm. SALVO DIVERSAMENTE INDICATO.**

4) ALL DIMENSIONS ARE IN mm. UNLESS OTHERWISE INDICATED.

✱ **LE DIMENSIONI SONO DA DEFINIRE IN BASE AL DIMENSIONAMENTO DEI FERRI.**

✱ DIMENSIONS TO BE DEFINED IN ACCORDING TO THE SECTION IRON SIZE.

REVISION Revisione	REVISION HISTORY Storia delle revisioni	DRAWN Autore	DATE Data
2	REVISED ACCORDING TO CUSTOMER'S REQUEST	RAUSA	06/09/12
1	ISSUED FOR CONSTRUCTION	M.B.	29/06/12
0	ISSUED FOR INFORMATION	M.B.	29/03/12

The master version of this document is stored as a digital file in a database. Approval process is digitally managed and no signature is visible on the document.
L'originale del presente documento risiede in un database digitale.Il processo di approvazione è gestito via software e le firme non sono visibili sul documento.

desmet ballestra
Desmet Ballestra S.p.A.
MILANO - Italy

DRAWING No. / Disegno No: **2F11-55-101-4**
CUSTOMER No. / N°. Cliente: -

JOB Commessa	2F11	SHEET Foglio	4
PLANT Impianto	SABIZ	SHEET REVISION Revisione Foglio	2
TITLE Titolo	FOUNDATION PLAN PLAN ELEVATION : ▽ 25500 ▽ 30500	SCALE Scala	1:50
		SECTION Sezione	-

We reserve the ownership under the law of this drawing with prohibition of even partial reproduction and to make it known it third persons without our written authorization.
Ci riserviamo la proprieta' a termini di legge di questo disegno con divieto di riprodurlo anche in parte o di renderlo noto a terzi senza nostra autorizzazione scritta.