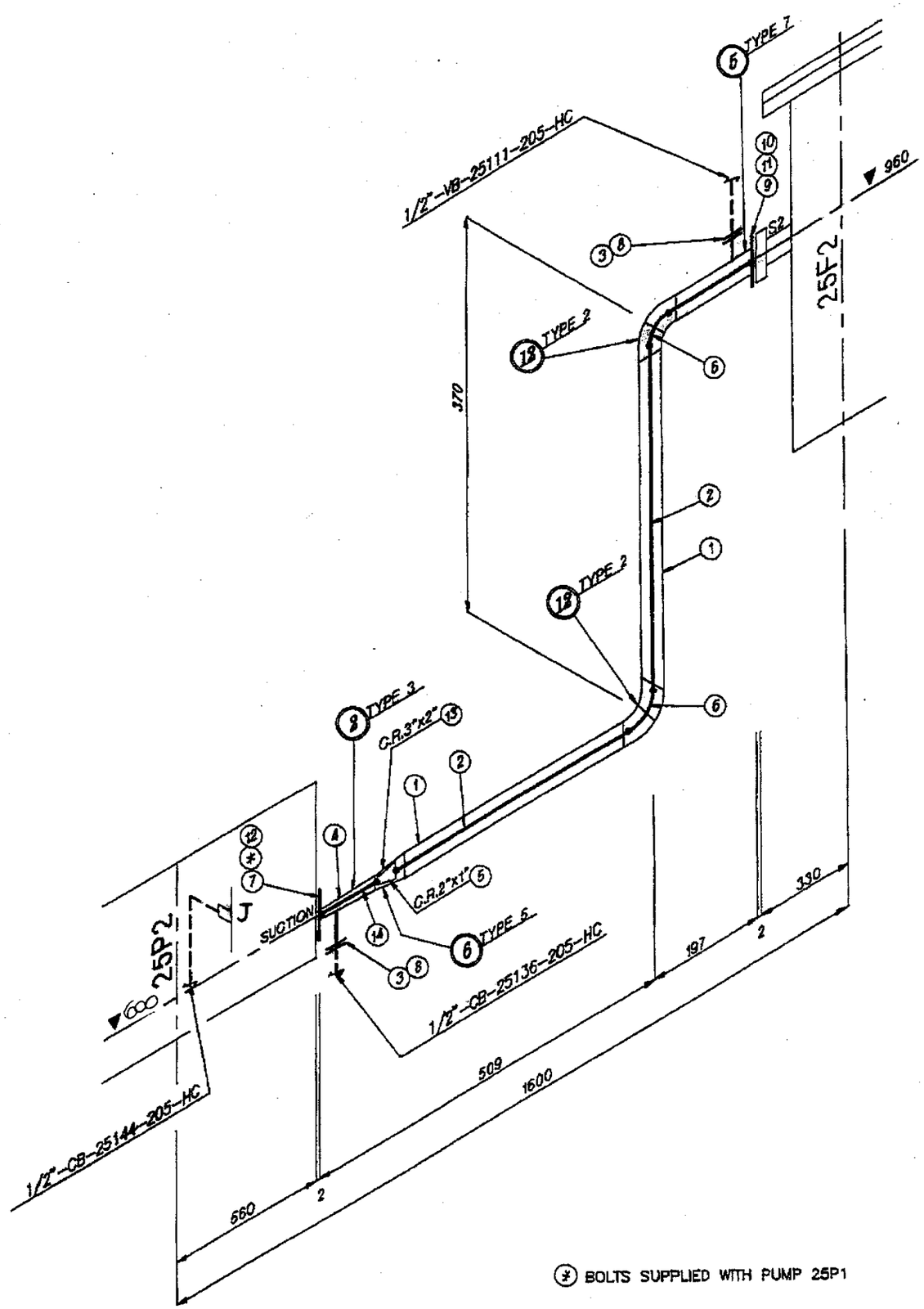

(*) BOLTS SUPPLIED WITH PUMP 25P1

ELENCO MATERIALI - BILL OF MATERIAL

TIPO MATERIALI - TYPE OF MATERIAL

	POS.	QUANT. QTY.	SIZE	DESCRIZIONE - DESCRIPTION	MATERIAL
PREFABBRICAZIONE - FABRICATION	1	1.1 m.	3"	PIPE ANSI B36.10 SMLS Sch.40	API5LGr.B
	2	1.1 m.	2"	PIPE ANSI B36.10 SMLS Sch.40	API5LGr.B
	3	0.2 m.	1/2"	PIPE ANSI B36.10 SMLS Sch.40	API5LGr.B
	14	0.3 m.	1"	PIPE ANSI B36.10 SMLS Sch.40	API5LGr.B
	4	1	2"x49	CONC.RED. IN TWO PIECES THK.3mm (2) TYPE 3	A570Gr35
	5	1	2"x1"	CONC.RED. ANSI B16.9 Sch. 40 SMLSS	A234-WPB
	13	1	3"x2"	CONC.RED. ANSI B16.9 Sch. 40 SMLSS	A234-WPB
	6	2	2"	ELBOW 90 ANSI B16.9 L.R. Sch. 40 SMLSS	A234-WPB
	7	1	1"	FLANGE S.O. ANSI B16.5 150# RF	A105Gr.I
	8	2	1/2"	FLANGE S.O. ANSI B16.5 150# RF	A105Gr.I
	9	1	3"	FLANGE S.O. ANSI B16.5 150# RF	A105Gr.I
MONTAGGIO - MOUNTING	10	4	5/8"x90	STUD BOLTS TYPE "B" TA.50.48	A193B7/A1942H
	11	1	3"	GASKET TA.50.5	B5C
	12	1	1"	GASKET TA.50.5	B5C

REV.	MODIFICHE Modifications	APPR.	DATE
3	ISSUED FOR JOB 1E35	ALE	22.02.10
2	ISSUED FOR CONSTRUCTION	MB	21.07.04
1	ISSUED FOR JOB : 2C53	C.O.	20.07.04
0	ISSUED FOR CONSTRUCTION		

BALLESTRA S.p.A.
MILANO (ITALIA)

DISEGNATO Drawn	MD	
CONTROLL. Checked		20.07.88
APPROVATO Approved		

CLIENTE Customer

IMPIANTO Plant: SULPHUREX

LINEA -Line: 2"-ZF-25007-211
JACKET-3"-VB-25007-205(HC)

DIS. 1A12.60.019
DWG. (1E35.60.019)

Sheet 7 Of

COMMESSA -JOB

NOTE (6) (8) (12) ST.46471

SALDATURE IN CAMPO / FIELD WELDING: DURANTE LA PREFABBRICAZIONE LASCIARE UNA DELLE PARTI 100mm PIU' LUNGA. / DURING FABRICATION LEAVE EITHER PART 100mm. LONGER.

Ci riserviamo la proprieta' e termini di legge di questo disegno con divieto di riprodurlo anche in parte o di renderlo noto a terzi senza nostra autorizzazione scritta.
We reserve the ownership under the law of this drawing with prohibition of even partial reproduction and to make it known to third persons without our written authorization.