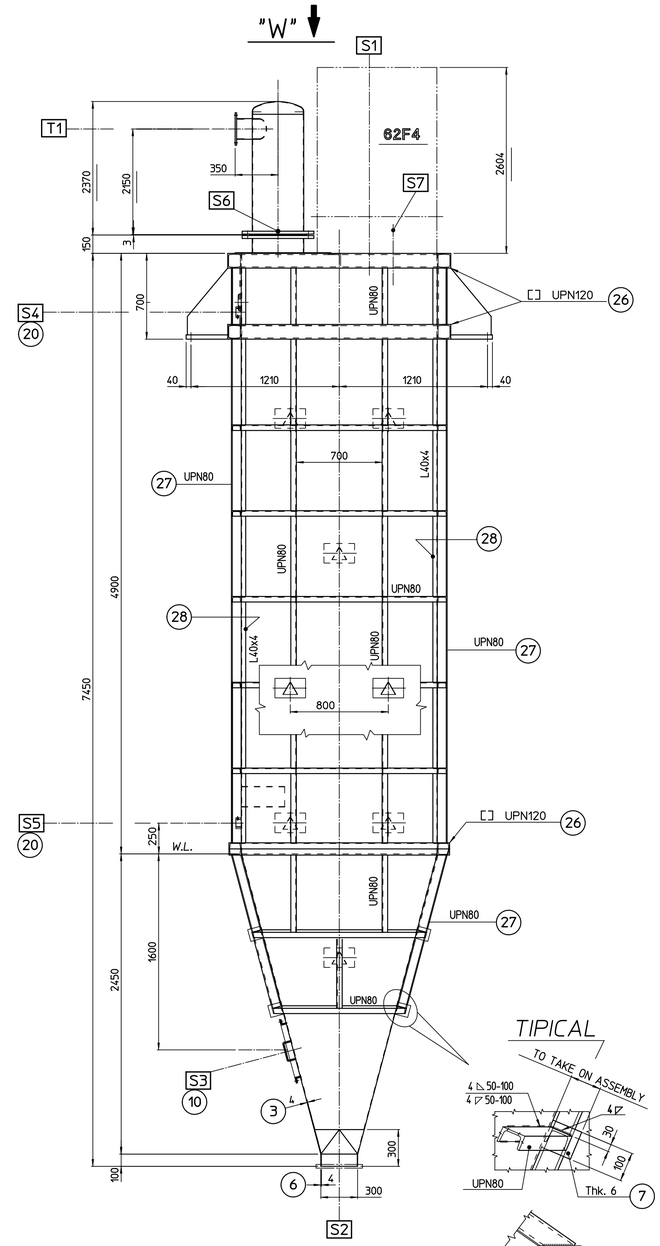

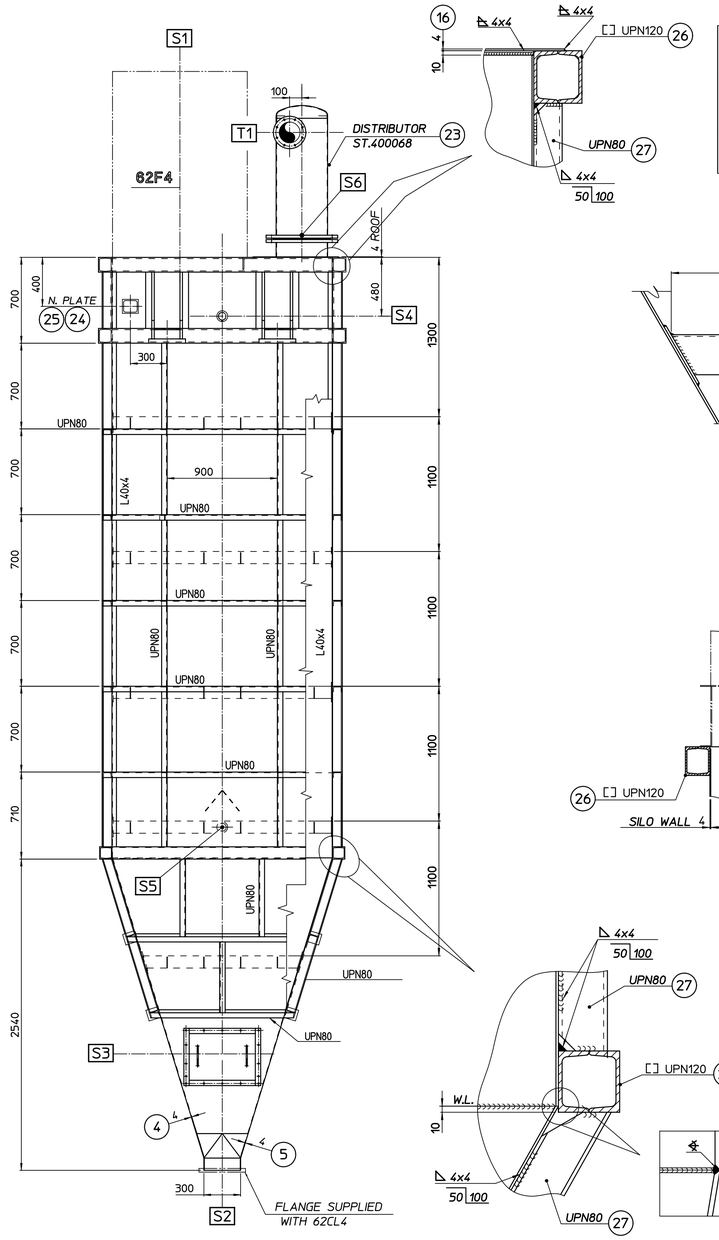

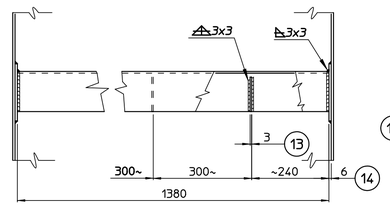

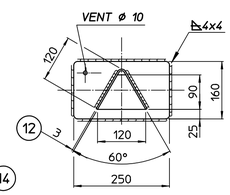

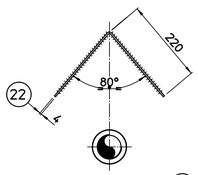

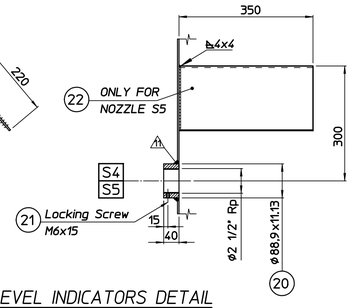

LEVEL INDICATORS DETAIL

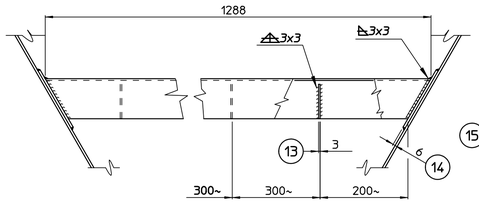

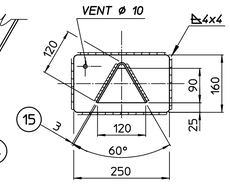

BAFFLES DETAIL

TYPICAL

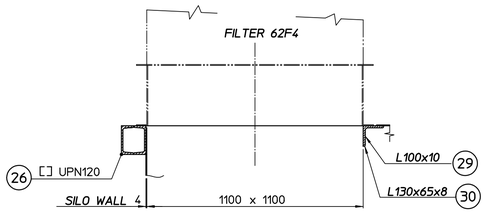

FILTER CONN. DETAIL

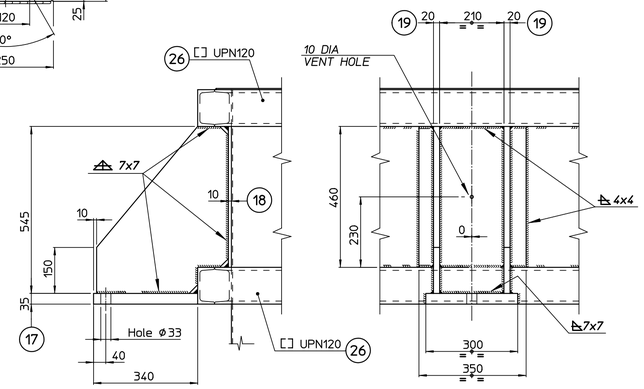

BRACKET DETAIL

N° 4 PIECES

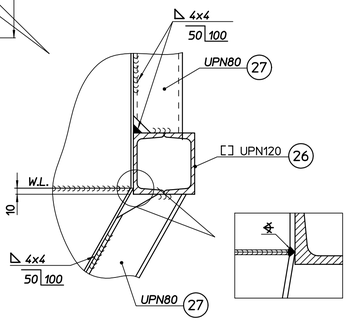

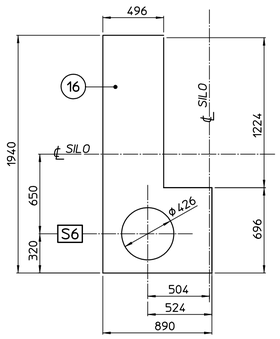

ROOF DETAIL

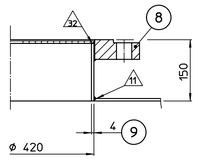

DETAIL NOZZLE "S6"

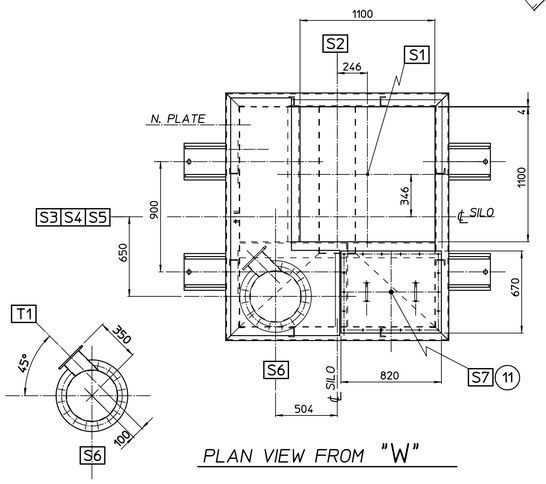

PLAN VIEW FROM "W"

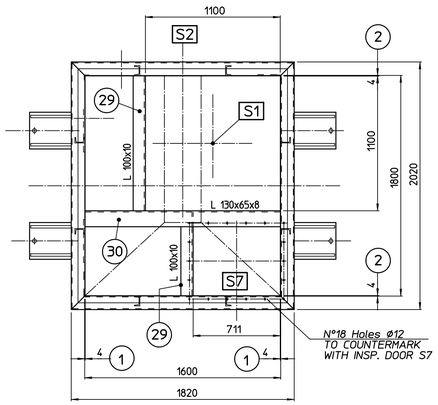

PLAN VIEW WITHOUT ROOF

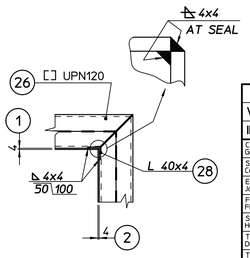

PESI - Weight		
VUOTO	Empty	3500~
IN ESERCIZIO	Operating	16000~

CAPACITA' GEOMETRICA Geometric capacity	dm3	~17000	
SOVRASPESSORE DI CORROSIONE Corrosion allowance	mm	–	
EFFICIENZA DELLE SALDATURE Joint efficiency		0,7	
FLUIDO E PESO SPECIFICO Fluid and specific gravity	600-1000 Kg/m3	POWDER	
SUPERFICIE DI SCAMBIO TERMICO Heat exchange surface	m2	–	
TEMPERATURA DI PROGETTO Design temperature	°C	65	
TEMPERATURA DI ESERCIZIO Operating temperature	°C	40	
PRESSIONE DI PROVA IDRAULICA Hydrostatic test pressure	Bar (g)	–	
PRESSIONE DI PROGETTO Design pressure	Bar (g)	~0,04	
PRESSIONE DI ESERCIZIO Operating pressure	Bar (g)	0	
DATI DI PROGETTO Design data		62V1A	
ENTE COLLAUDATORE Inspection institute		CUSTOMER	
NORME Code		STD. BALLESTRA	

PART. SALDATURE - Welding details

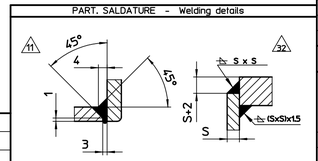

POS Item	N	DN	PN	TIPO Type	SERVIZIO Service
T1	1	150	–	SB-ATI-PF002	PRODUCT INLET
S7	1	820x 670	–	SB-PRS-00233	INSPECTION DOOR
S6	1	400	2,5	EN-1092-1/01/B1	DISTRIBUTOR CONN.
S5	1	Rp 2 1/2"	–	UNI ISO 7/1	LSL CONNECTION
S4	1	Rp 2 1/2"	–	UNI ISO 7/1	LSH CONNECTION
S3	1	450X 550	–	ST.400032	INSPECTION DOOR
S2	1	300x 300	–	AS DWG	PRODUCT OUTLET
S1	1	1100x 1100	–	AS DWG	FILTER CONNECT.

MANTELLO - Shell

CONNESSIONI - Connection

POS. Posit.	DENOMINAZIONE - Denomination		Nº PEZZI Pieces	DIS. DETT. Detail dwg.	MATERIALE Material	TIPO Type	DIMENSIONI FINITE Finished dimension
35							
34							
33							
32							
31							
30	ANGLE		1,6	mt.~	A 36	–	L 130x65x8
29	ANGLE		1,8	mt.~	A 36	–	L 100x10
28	ANGLE		18	mt.~	A 36	–	L 40x4
27	SHAPE		60	mt.~	A 36	–	UPN 80
26	SHAPE		46	TOTAL mt.~	A 36	–	[] UPN 120
25	NAME PLATE		1	SB-PRS-00119	ALUMINIUM	–	
24	NAME PLATE HOLDER		1	SB-PRS-00121	A 283 Gr. C	–	
23	DISTRIBUTOR		1	ST.400068	A 283 Gr. C	–	TYPE "D"
22	PROTECTION BAFFLE		1	SP.1165	A 283 Gr. C	Thk 4	AS DWG
21	SCREW		2		CARBON STEEL	UNI 6118	M6x15
20	NOZZLE	S5 - S4	2	SP.1165	A 106 B	Lg. 40	ø88.9x11.13
19	RIB		8		A 285 Gr. C	Thk 20	AS DWG
18	REINFORC. PLATE		4		A 285 Gr. C	Thk 10	350x460
17	BASE PLATE		4		A 285 Gr. C	Thk 35	340x300
16	ROOF		1		A 283 Gr. C	Thk 4	AS DWG
15	PLATE		1		A 283 Gr. C	Thk 3	AS DWG
14	REINFORC. PLATE		16		A 283 Gr. C	Thk 6	250x160
13	PLATE		46		A 283 Gr. C	Thk 3	AS DWG
12	PLATE		7		A 283 Gr. C	Thk 3	AS DWG
11	INSPECTION DOOR	S7	1	SB-PRS-00233	CARBON STEEL	Thk 4	820x670
10	INSPECTION DOOR	S3	1	ST.400032	CARBON STEEL	–	450x550
9	NOZZLE	S6	1		A 283 Gr. C	Lg.144	ø 420x4
8	FLANGE	S6	1		A 105	EN-1092-1/01/B1	DN 400 PN 2.5
7	PLATE		8		A 283 Gr. C	Thk 6	AS DWG
6	PLATE	S2	4		A 283 Gr. C	Thk 4	292x292
5	REDUCTION		1		A 283 Gr. C	Thk 4	AS DWG
4	HOPPER WALL		2		A 283 Gr. C	Thk 4	AS DWG
3	HOPPER WALL		2		A 283 Gr. C	Thk 4	AS DWG
2	WALL		2		A 283 Gr. C	Thk 4	1592x6890
1	WALL		2		A 283 Gr. C	Thk 4	1792x6890

NOTES:

1) SEE PROJECT DATA-SHEET FOR THE APPLICABLE REVISION OF THE ATTACHEMENTS

● FILTER 62F4 "BOLDROCCHI" TYPE MBC S D 20 AL

REV.	DESCRIZIONE - Description	DIS.-Drawn	DATE
0	ISSUED FOR CONSTRUCTION	G.R.	14-09-10

THE MASTER VERSION OF THIS DOCUMENT IS STORED AS A DIGITAL FILE IN SOFTWARE ARCHIVE - APPROVAL PROCESS IS DIGITALLY MANAGED, DETAILS DO NOT SHOW ON PAPER COPIES.
L'orginale del presente documento risiede in un database per l'archiviazione digitale - il processo di approvazione è gestito via software e le firme non sono visibili sulle riproduzioni

desmet ballestra

SCALA Scale

CLIENTE Customer –

PROGETTO Project 1E35Z

IMPIANTO Plant Sabiz 25000

TITOLO DIS. Title dwg. COMPONENT "A" SILO

DIS. DWG. 1E35-30-1107-1

ITEM:62V4

DIMENSIONATO ATI

Ci riserviamo la proprieta' a termini di legge di questo disegno con divieto di riprodurlo anche in parte o di renderlo noto a terzi senza nostra autorizzazione scritta.
We reserve the ownership under the law of this drawing with prohibition of even partial reproduction and to make it known to third persons without our written authorization.