Ci riserviamo la proprieta' a termini di legge di questo disegno con divieto di riprodurlo anche in parte o di renderlo noto a terzi senza nostra autorizzazione scritta.

We reserve the ownership under the law of this drawing with prohibition of even partial reproduction and to make it known to third persons without our written authorization.

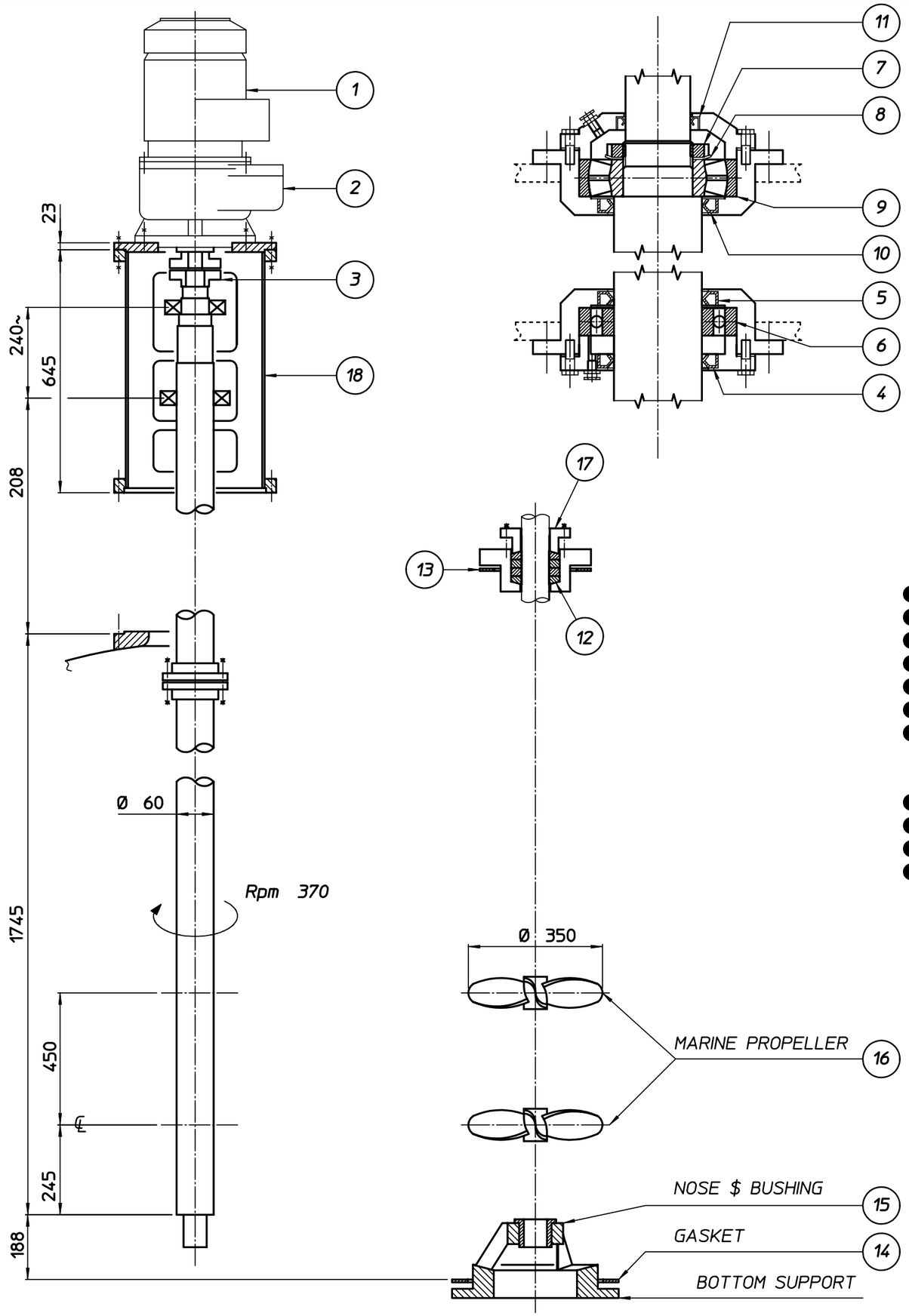

● SPARE PARTS

	POS.	DENOMINATION	Nº PIECES	DETAIL Dwg.	MATERIAL	TYPE	FINISHED DIMENSION
	20						
	19						
	18	MOUNTING	1	ST.41021	CARBON STEEL	SHEET 1	
	17	STUFFING BOX	1	ST.40911	CARBON STEEL		
	16	MARINE PROPELLER	2		CARBON STEEL		
●	15	NOSE & BUSHING	1+1	ST.40745	CARBON STEEL		
●	14	UNIVERSAL GASKET BOTTOM SUPPORT	1	SP. 1444			Ø 260/230 Thk. 2
●	13	UNIVERSAL GASKET	1	SP. 1444			Ø 114/98 Thk. 2
●	12	PTFE COATED PACKING	1				⌀ 8x8 Sv. 1850
●	11	UPPER SEAL RING	1		ISO NBR	A	45608
●	10	LOWER SEAL RING	1		ISO NBR	A	608010
●	9	BEARING	1			SKF 21310CC	Ø 110/50 x 27
	8	SAFETY WASHER	1			SKF	MB 10
	7	LOCKING NUT	1			SKF	KM 10
●	6	BEARING	1			SKF 6212	Ø 110/60 x 22
●	5	UPPER SEAL RING	1		ISO NBR	A	608010
●	4	LOWER SEAL RING	1		ISO NBR	A	608010
●	3	FLEXIBLE JOINT	1			RUPEX	REWN 4
	2	REDUCER R 1 : 3,894	1		STOBER C402 F 250 - 0039 MR 300/38		
	1	MOTOR 7,5 KW	1		GR 132 - 4 POLES - 50 HZ - V1		

REV.	DESRIZIONE - Description	DIS.-Drawn	DATE
1	NUMBER WORKING DWG. MODIFIED, WAS 2C57.35.001	R.G.	24.09.10

desmet ballestra

SCALA
Scale
//

CLIENTE
Customer

COMMESSA
Job

IMPIANTO
Plant: SABIZ 25000

TITOLO DIS.
Title dwg.: RECOVERED SLURRY DISSOLVING TANK

BALLESTRA'S SUPPLY - ITEM 62A1A-S

DWG. 1E35.35.1146-2

FOGLIO
Sheet: 2 DI Of 2

RIFERIMENTO D.S.:
Reference to d.s.: 2C57-62A1A-F2-R0.mi

RICAVATO DA:
Obtained from: 2C57-35-001

Ci riserviamo la proprieta' a termini di legge di questo disegno con divieto di riprodurlo anche in parte o di renderlo noto a terzi senza nostra autorizzazione scritta.
We reserve the ownership under the law of this drawing with prohibition of even partial reproduction and to make it known to third persons without our written authorization.