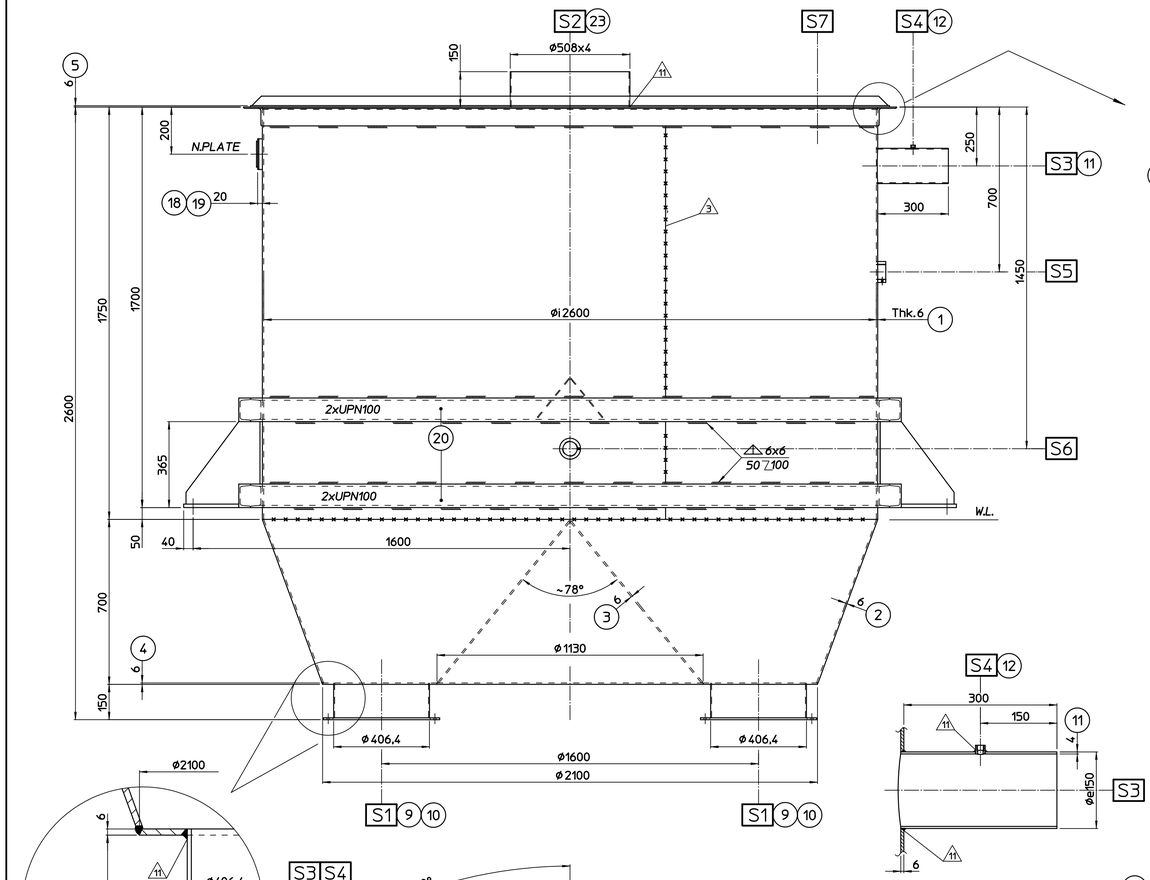

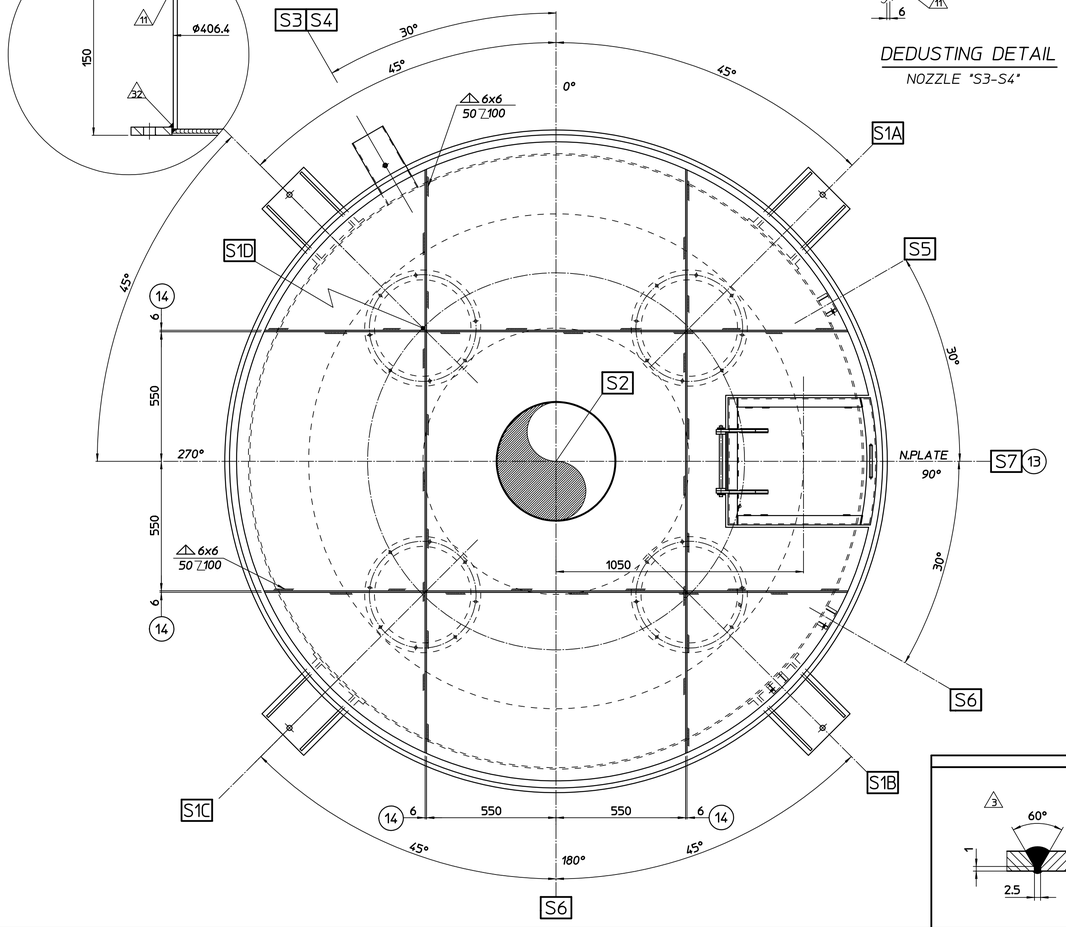

DEDUSTING DETAIL

NOZZLE "S3-S4"

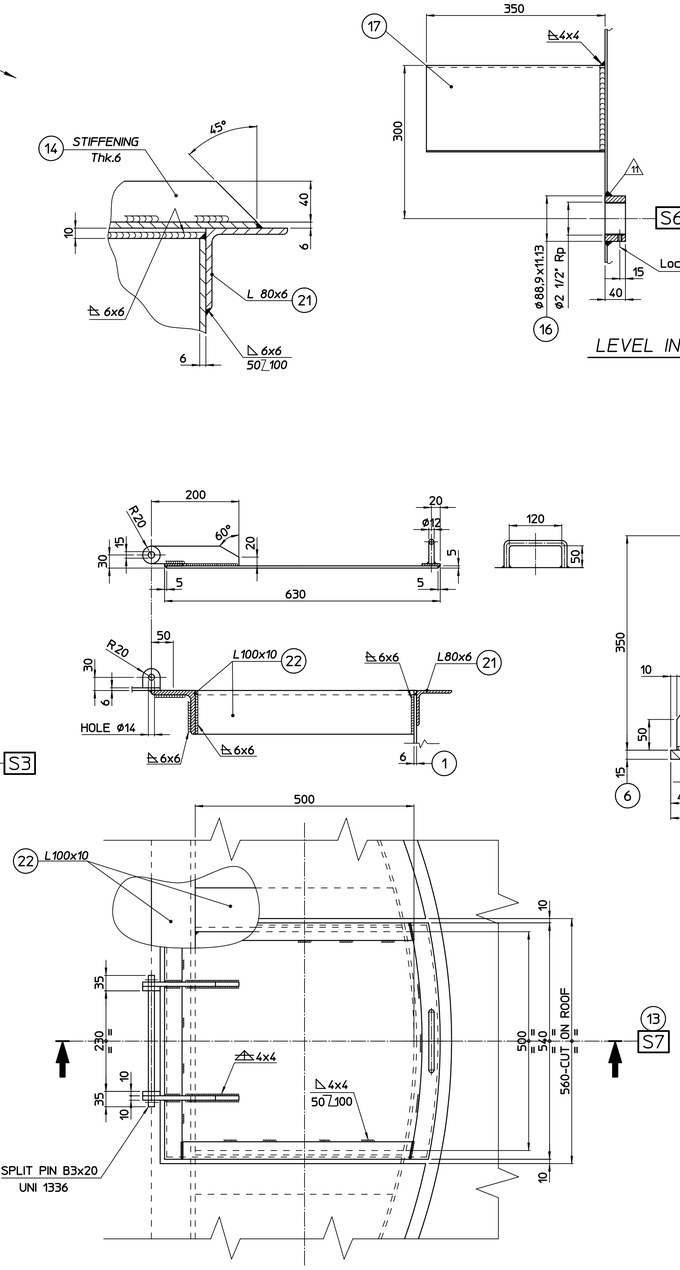

HINGED DOOR DETAIL

NOZZLE "S7"

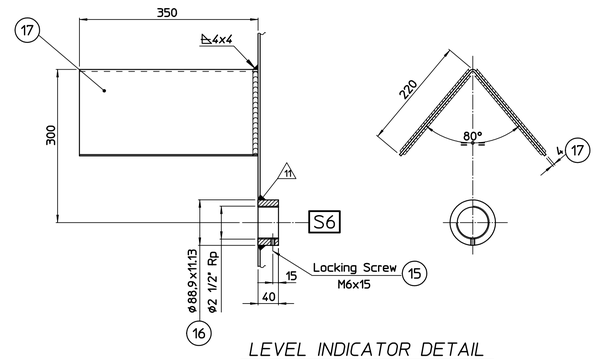

LEVEL INDICATOR DETAIL

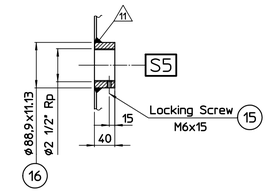

LEVEL INDICATOR DETAIL

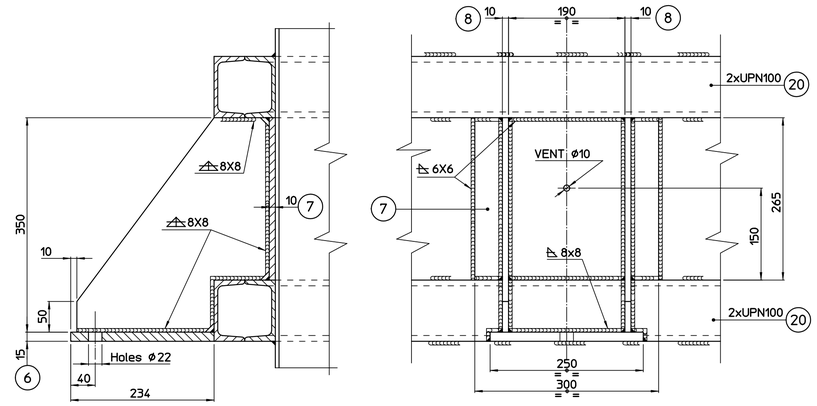

BRACKET DETAIL

N° 4 PIECES

POS. Posit.	DENOMINAZIONE - Denomination		N° PEZZI Pieces	DIS. DETT. Detail dwg.	MATERIALE Material	TIPO Type	DIMENSIONI FINITE Finished dimension
30							
29							
28							
27							
26							
25							
24							
23	NOZZLE	S2	1		A 283 Gr. C	Lg.150	øe508x4
22	ANGLE		4	ml.~	A 36		L 100x10
21	ANGLE		9	ml.~	A 36		L 80x6
20	SHAPE		35	ml.~	A 36		UPN 100
19	NAME PLATE HOLDER		1	SB-PRS-00119/0	A 283 Gr.C.		
18	NAME PLATE		1	SB-PRS-00121/0	ALUMINIUM		
17	PROTECTION BAFFLE	S6	1		A 283 Gr.C.	Thk.4	AS DWG
16	NOZZLE	S5-S6	2	ST.1365	A 106 B	Lg.40	ø88.9x11.13
15	SCREW		2	ST.1365	CARBON STEEL	UNI 6118	M6x15
14	STIFFENING		4		A 283 Gr.C.	Lg.2479	* 40x64
13	HINGED DOOR	S7	1	ST.41071	CARBON STEEL		500x500
12	HALF COUPLING	S4	1		A 105	ANSI B1.20.1	1/4" F NPT.3000#
11	NOZZLE	S3	1		A 283 Gr.C.	Lg.300	øe150x4
10	FLANGE	S1	4		A 283 Gr.C.	SB-ATI-PF001	DN 16"
9	NOZZLE	S1	4		A 106 B	Lg.150	ø406.4x4.19
8	RIB		8		A 283 Gr.C.	Thk.10	AS DWG
7	REINF.PLATE		4		A 283 Gr.C.	Thk.10	300x265
6	BASE PLATE		4		A 283 Gr.C.	Thk.15	250x234
5	ROOF		1		A 283 Gr.C.	Thk.6	ø2712
4	CLOUSURE PLATE		1		A 283 Gr.C.	Thk.6	ø2100/1300
3	CONE		1		A 283 Gr.C.	Thk.6	AS DWG
2	CONE		1		A 283 Gr.C.	Thk.6	AS DWG
1	SHELL		1		A 283 Gr.C.	Thk.6	8187x1740

NOTES:

1) SEE PROJECT DATA-SHEET FOR THE APPLICABLE REVISION OF THE ATTACHEMENTS

PESI - Weight		
VUOTO	Empty	2300~
IN ESERCIZIO	Operating	5600~

CAPACITA' GEOMETRICA Geometric capacity	dm3	12150
SOVRASPESSORE DI CORROSIONE Corrosion allowance	mm	-
EFFICIENZA DELLE SALDATURE Joint efficiency		0,7
FLUIDO E PESO SPECIFICO Fluid and specific gravity	Kg/dm3 0,3-0,35	DETERGENT POWDER
SUPERFICIE DI SCAMBIO TERMICO Heat exchange surface	m2	-
TEMPERATURA DI PROGETTO Design temperature	°C	65
TEMPERATURA DI ESERCIZIO Operating temperature	°C	40
PRESSIONE DI PROVA IDRAULICA Hydrostatic test pressure	Bar (g)	-
PRESSIONE DI PROGETTO Design pressure	Bar (g)	ATM
PRESSIONE DI ESERCIZIO Operating pressure	Bar (g)	ATM
DATI DI PROGETTO Design data		65V7
ENTE COLLAUDATORE Inspection institute		CUSTOMER
NORME Code		STD. BALLESTRA

POS Item	N	DN	PN	TIPO Type	SERVIZIO Service
S7	1	500x 500	-	AS DWG	HINGED DOOR
S6	1	Rp 2 1/2"	-	UNI ISO 7/1	LSL CONNECTION
S5	1	Rp 2 1/2"	-	UNI ISO 7/1	LSH CONNECTION
S4	1	1/4"F	3000#	ASME B1.20.1.NPT	P.CONNECTION
S3	1	øe150	-	AS DWG	DEDUSTING
S2	1	ø508	-	AS DWG	PRODUCT INLET
S1	4	400	-	SB-ATI-PF001	PRODUCT OUTLET

CONNESSIONI - Connection

PART. SALDATURE - Welding details

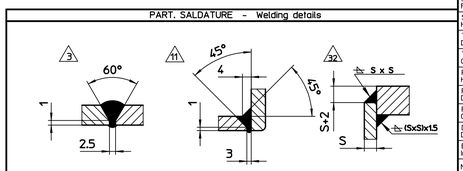

REV.	DESCRIZIONE - Description	DIS.-Drawn	DATE
0	ISSUED FOR CONSTRUCTION AND ORIENTATION	G.R.	17-09-10

THE MASTER VERSION OF THIS DOCUMENT IS STORED AS A DIGITAL FILE IN SOFTWARE ARCHIVE - APPROVAL PROCESS IS DIGITALLY MANAGED. DETAILS DO NOT SHOW ON PAPER COPIES.

L'orginale del presente documento risiede in un database per l'archiviazione digitale - il processo di approvazione è gestito via software e le firme non sono visibili sulle riproduzioni

desmet ballestra

SCALA Scale

CLIENTE Customer -

PROGETTO Project

IMPIANTO Plant

TITOLO DIS. Title dwg. FINAL PRODUCT HOPPER

DIS. DWG. 1E35-30-1137-1

ITEM: 65V7

RIF. 2C57-30-030

Ci riserviamo la proprieta' a termini di legge di questo disegno con divieto di riprodurlo anche in parte o di renderlo noto a terzi senza nostra autorizzazione scritta.
We reserve the ownership under the law of this drawing with prohibition of even partial reproduction and to make it known to third persons without our written authorization.