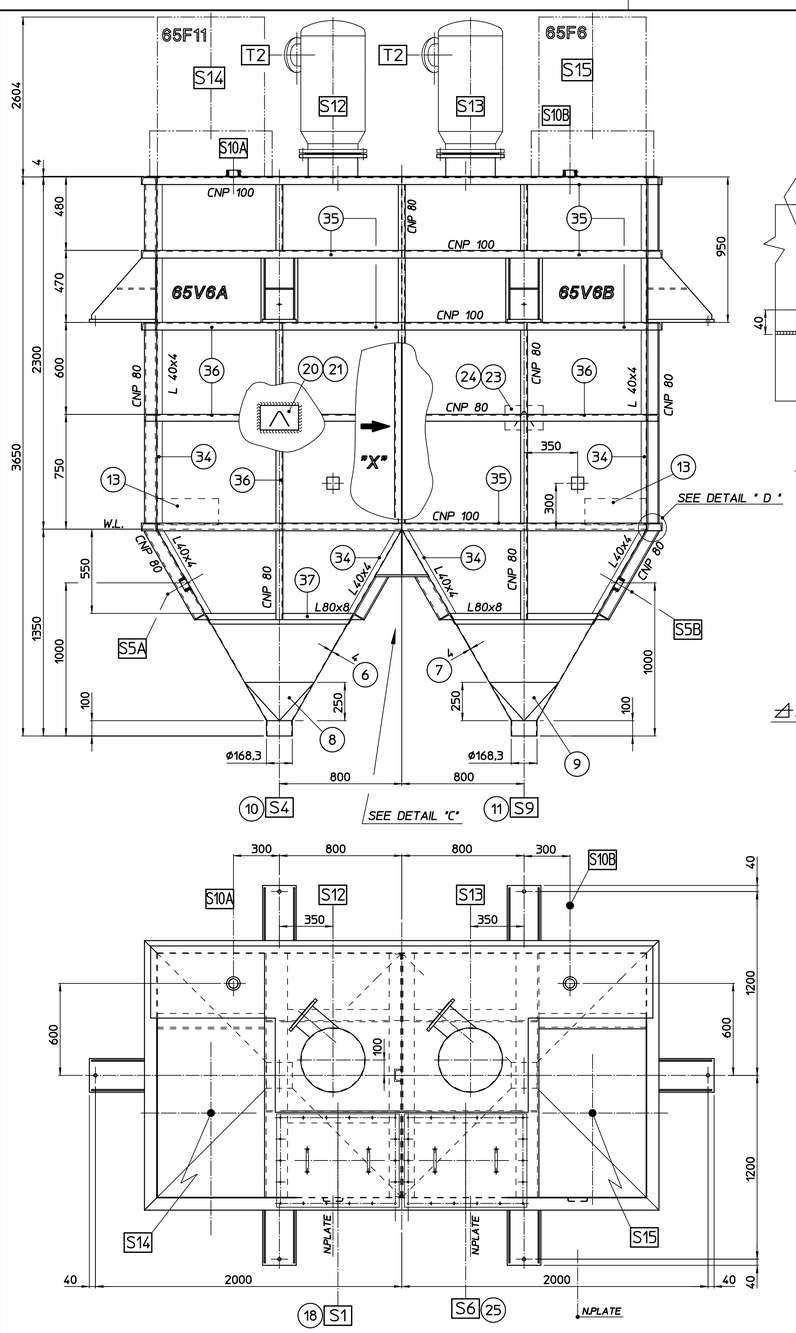

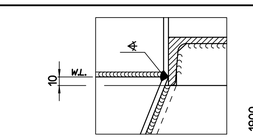

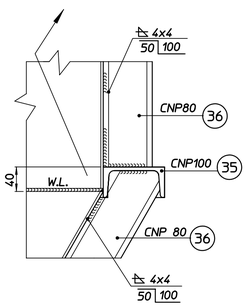

DETAIL "D"

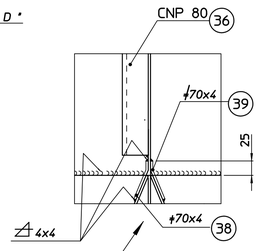

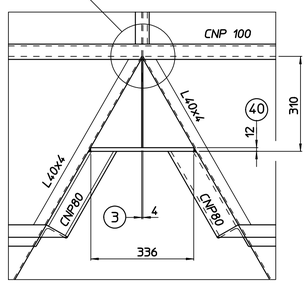

DETAIL "C"

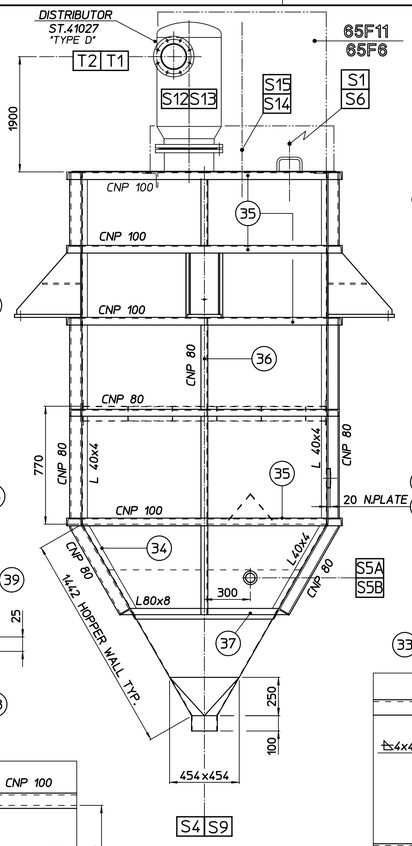

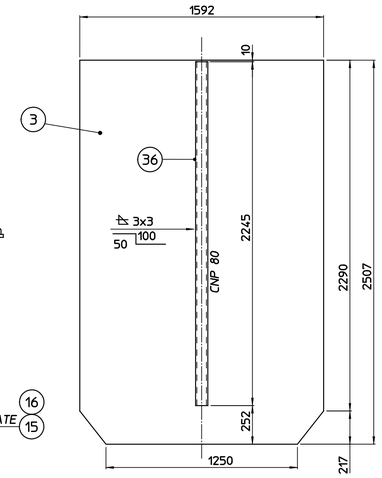

VIEW FROM "X"

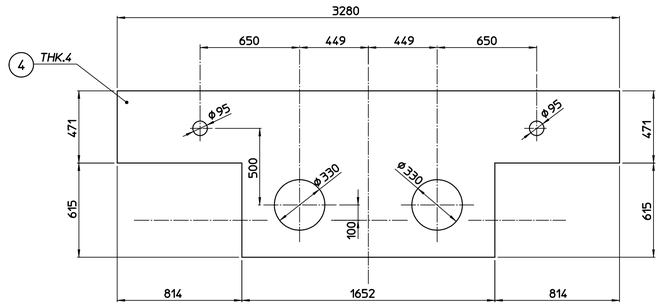

ROOF DETAIL

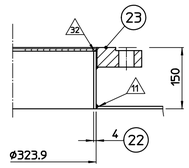

DISTRIBUTOR CONNECTION
DETAIL "S12-S13"

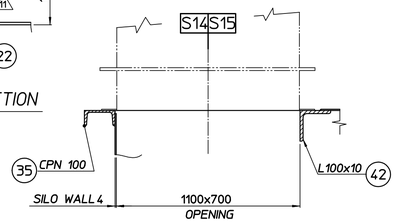

FILTER CONN. DETAIL

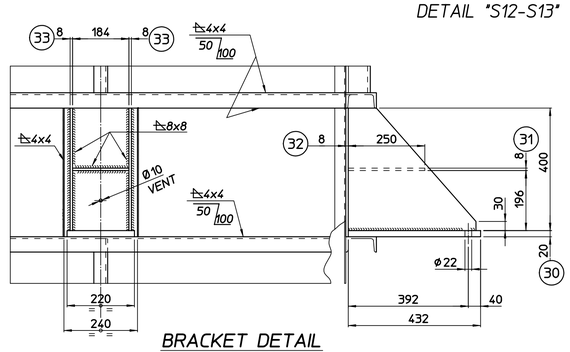

BRACKET DETAIL
N.6 PIECES

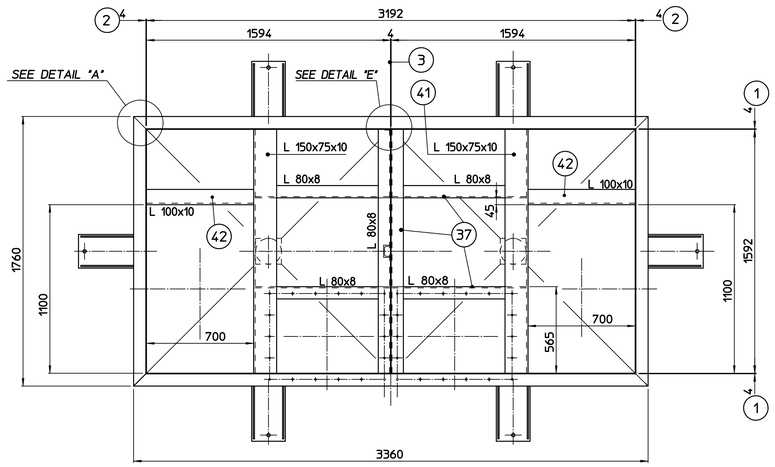

PLAN VIEW WITHOUT ROOF

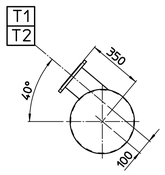

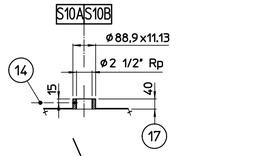

LEVEL INDICATORS DETAIL

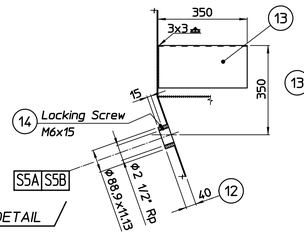

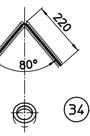

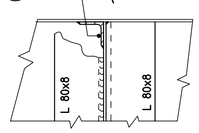

DETAIL " E "

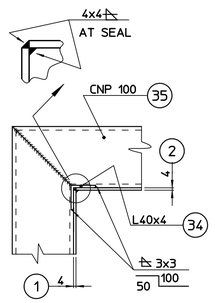

DETAIL " A "

BAFFLES DETAIL

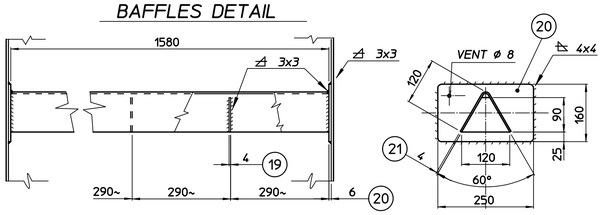

PART. SALDATURE - Welding details

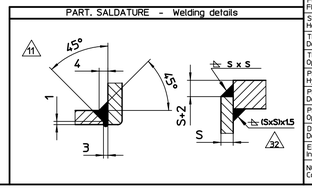

PESI - Weight			
VUOTO	Empty	3000~	
IN ESERCIZIO	Operating	11000~	
CAPACITA' GEOMETRICA Geometric capacity	Liters	7300~	7300~
SOVRASPESSORE DI CORROSIONE Corrosion allowance	mm	0	0
EFFICIENZA DELLE SALDATURE Joint efficiency		0.7	0.7
FLUIDO E PESO SPECIFICO Fluid and specific gravity	Kg/dm3	Speckles 0.4-0.6	TAED 0.4-0.6
SUPERFICIE DI SCAMBIO TERMICO Heat exchange surface	m2	-	-
TEMPERATURA DI PROGETTO Design temperature	°C	65	65
TEMPERATURA DI ESERCIZIO Operating temperature	°C	40	40
PRESSIONE DI PROVA IDRAULICA Hydrostatic test pressure	Bar (g)	-	-
PRESSIONE DI PROGETTO Design pressure	Bar (g)	-0.04	-0.04
PRESSIONE DI ESERCIZIO Operating pressure	Bar (g)	-0.02 / 0	-0.02 / 0
DATI DI PROGETTO Design data		65V6A	65V6B
ENTE COLLAUDATORE Inspection institute		CUSTOMER	
NORME Code		STD. BALLESTRA	

● FILTERS 65F6-65F11 "BOLDROCCHI" TYPE MBC S D 20 35L
1) SEE PROJECT DATA-SHEET FOR THE APPLICABLE REVISION OF THE ATTACHEMENTS

POS Item	N	DN	PN	TIPO Type	SERVIZIO Service	POS Item	N	DN	PN	TIPO Type	SERVIZIO Service
S10 A/B	2	Rp 2 1/2"		UNI ISO 7/1	LSH CONNECTION	T2	1	150		SB-ATI-PF-002	PRODUCT INLET
S9	1	150		AS DWG	PRODUCT OUTLET	T1	1	150		SB-ATI-PF-002	PRODUCT INLET
S8											
S7											
S6	1	800x 610		SB-PRS-00233	PRODUCT INLET						
S5 A/B	2	Rp 2 1/2"		UNI ISO 7/1	LSL CONNECTION	S15	1	1100 x700	-	AS DWG	FILTER CONN.
S4	1	150		AS DWG	PRODUCT OUTLET	S14	1	1100 x700	-	AS DWG	FILTER CONN.
S3						S13	1	300	2,5	EN-1092-1/01/B1	DISTRIBUTOR CONN.
S2						S12	1	300	2,5	EN-1092-1/01/B1	DISTRIBUTOR CONN.
S1	1	800x 610		SB-PRS-00233	INSPECTION DOOR						
MANTELLO - Shell						MANTELLO - Shell					
CONNESSIONI - Connection						CONNESSIONI - Connection					

POS. Posit.	DENOMINAZIONE - Denomination	N° PEZZI Pieces	DIS. DETT. Detail dwg.	MATERIALE Material	TIPO Type	DIMENSIONI FINITE Finished dimension
45						
44						
43						
42	ANGLE	1,5 m		A36	L100x10	
41	ANGLE	3,5 m		A36	L150x75x10	
40	PLATE	1		A283-Gr.C	THK.4	4336x1250
39	PLATE	1		A283-Gr.C	THK.4	470x1590
38	PLATE	1		A283-Gr.C	THK.4	470x1590
37	ANGLE	16 m		A36	L80x8	
36	SHAPE	30 m		A36	CNP80	
35	SHAPE	32 m		A36	CNP100	
34	ANGLE	12 m		A36	L40x4	
33	RIB	12		A283-Gr.C	THK.8	AS DWG
32	REINFORC. PLATE	6		A283-Gr.C	THK.8	240x420
31	PLATE	6		A283-Gr.C	THK.8	250x184
30	BASE PLATE	6		A283-Gr.C	THK.20	432x220
29						
28						
27						
26						
25	INSPECTION DOOR S6	1	SB-PRS-00233	A283-Gr.C		800x610
24						
23	FLANGE "S12-S13"	2		A105	EN-1092-1/01/B1	DN 300 PN 2.5
22	NOZZLE	2		A283-Gr.C	Lg 144	ø323.9x4
21	PLATE	2		A283-Gr.C	THK.3	AS DWG
20	REINFORC. PLATE	4		A283-Gr.C	THK.6	250x160
19	PLATE	10		A283-Gr.C	THK.3	AS DWG
18	INSPECTION DOOR S1	1	SB-PRS-00233	A283-Gr.C		800x610
17	NOZZLE S10	2	SP1365	A105	L=40	ø88,9x11,13
16	NAME PLATE HOLDER	2	SB-PRS-00119	A283-Gr.C		
15	NAME PLATE	2	SB-PRS-00121	ALUMINIUM		
14	SCREW "S5-S10"	4		CARBON STEEL		M6x15
13	BAFFLE	2	SP1365	A105		
12	NOZZLE S5	2	SP1365	A105	L=40	ø88,9x11,13
11	NOZZLE S9	1		A283-Gr.C	THK.4	AS DWG
10	NOZZLE S4	1		A283-Gr.C	THK.4	AS DWG
9	REDUCER	1		A283-Gr.C	THK.4	AS DWG
8	REDUCER	1		A283-Gr.C	THK.4	AS DWG
7	HOPPER WALL	4		A283-Gr.C	THK.4	AS DWG
6	HOPPER WALL	4		A283-Gr.C	THK.4	AS DWG
5						
4	ROOF	1		A283-Gr.C	THK.4	AS DWG
3	INSIDE WALL	1		A283-Gr.C	THK.4	AS DWG
2	WALL	2		A283-Gr.C	THK.4	1592x2290
1	WALL	2		A283-Gr.C	THK.4	3192x2290

REV.	DESCRIZIONE - Description	DIS.-Drawn	DATE
0	ISSUED FOR CONSTRUCTION	G.R.	04-10-10

THE MASTER VERSION OF THIS DOCUMENT IS STORED AS A DIGITAL FILE IN SOFTWARE ARCHIVE - APPROVAL PROCESS IS DIGITALLY MANAGED. DETAILS DO NOT SHOW ON PAPER COPIES.

desmet ballestra

SCALA Scale

CLIENTE Customer: -
PROGETTO Project:
IMPIANTO Plant: Sabiz 25000
TITOLO DIS. Title dwg.: SPECKLES "A" AND "B" SILOS
ITEM: 65V6A/B

DIS. DWG. 1E35-30-1126-1

RIF. 2C57 2A09-30-144/2

Ci riserviamo la proprieta' a termini di legge di questo disegno con divieto di riprodurlo anche in parte o di renderlo noto a terzi senza nostra autorizzazione scritta.
We reserve the ownership under the law of this drawing with prohibition of even partial reproduction and to make it known to third persons without our written authorization.