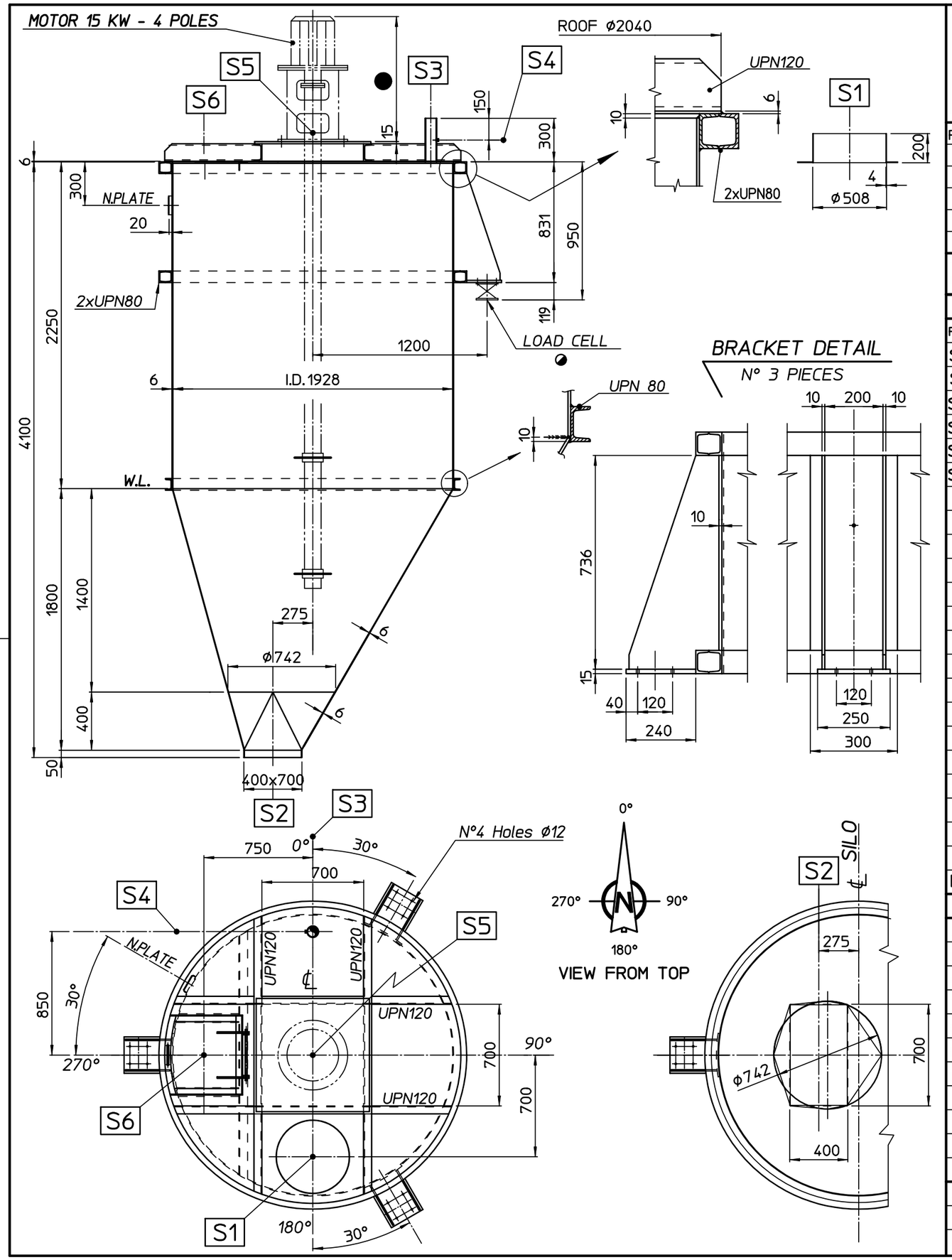

desmet ballestra	ITEM 64V3	CUSTOMER	DWG. 1E35. 35 . 1119-1
		BASE POWDER COLLECTING SILO	FLOW SHEET 1E35 . 10 . 1105
	N°REQUIRED 1	PLANT Sabiz 25000 / JOB 1E35Z	SHEET 1 OF 1

Rev.	Date	Drawn	Description
0	06.07.10	G.R.	ISSUED FOR INFORMATION
1	22.09.10	O.C. GR	ISSUED FOR CONSTRUCTION - ORIENTATION AND CELLE TYPE DEFINED
2	09.11.10	G.R.	DIAMETER SILO MODIFIED, WAS DIA. 2500
3	24.11.10	G.R.	MODIFIED WHERE INDICATED WITH ③
4			

The master version of this document is stored as a digital file in a database. Approval process is digitally managed and no signature is visible on the document.
L'originale del presente documento risiede in un database digitale. Il processo di approvazione è gestito via software e le forme non sono visibili sul documento.

NOZZLES

POS.	SIZE	RATING	N°	SERVICE	THK.	NOZZLES ORIENT.
S1	Ø508	AS DWG	1	PRODUCT INLET	4	SEE ORIENTATION PLAN
S2	400x 700	AS DWG	1	PRODUCT OUTLET	4	
S3	Øe80	AS DWG	1	DEDUSTING	4	
S4	1/4" F	ANSI B1.20.1 NPT 3000#	1	P CONNECTION	-	
S5	●	AS DWG.	1	STIRRER CONNECTION	-	
S6	550x 500	AS DWG	1	HINGED DOOR	-	

NAME PLATE POSITION

MATERIALS OR EQUIVALENT

SHELL/COVER	A 283 C
NOZZLES	A 283 C / A 106 B
GASKET	See SP. 1444/1
SECTION IRON	A 36
BRACKETS	A 283 C
BOLTS	A 307 B
FLANGE	A 105

DESIGN DATA

OPERATING PRESSURE	Bar (g)	ATM
DESIGN PRESSURE	Bar (g)	ATM
HYDROSTATIC TEST PRESSURE	Bar (g)	
PNEUMATIC TEST PRESSURE	Bar (g)	
OPERATING TEMPERATURE	°C	40
DESIGN TEMPERATURE	°C	60
FLUID/SPECIFIC WEIGHT	0.25-0.4 Kg/dm3	POWDER
HEAT EXCHANGE SURFACE	m2	
HEAT TREATMENT		
X-RAY TEST		
PENETRATING LIQUIDS TEST		
JOINT EFFICIENCY		0,7
CORROSION ALLOWANCE	mm	
GEOMETRIC CAPACITY	dm3	~8900
INSPECTION INSTITUTE		CUSTOMER
CODE		STD. BALLESTRA

WEIGHTS

EMPTY ~1750 Kg — OPERATING ~4500 Kg

STD. DETAILS

WORKING DWG .	1E35-30-1119/2
PAINTING	SB-ATI-SP002/4
GENERAL NOTES	SB-PRS-SP001/0
NAME PLATE	SB-PRS-00119/0
NAME PLATE HOLDER	SB-PRS-00121/0
HINGE DOOR "S6"	SB-PRS-00255/0

INSULATION: NO

NOTE : ◐ No. 3 LOAD CELL "TEA" TYPE: CTIC22 - C2S 2,5 T. BALLESTRA'S SUPPLY ③
● BY MANUFACTURER

RIF. 2C57.30.029/0

Ci riserviamo la proprieta' a termine di legge di questo disegno con divieto di riprodurlo anche in parte o di renderlo noto a terzi senza nostra autorizzazione scritta.

We reserve the ownership under the law of this drawing with prohibition of even partial reproduction and to make it known to third persons without our written authorization.