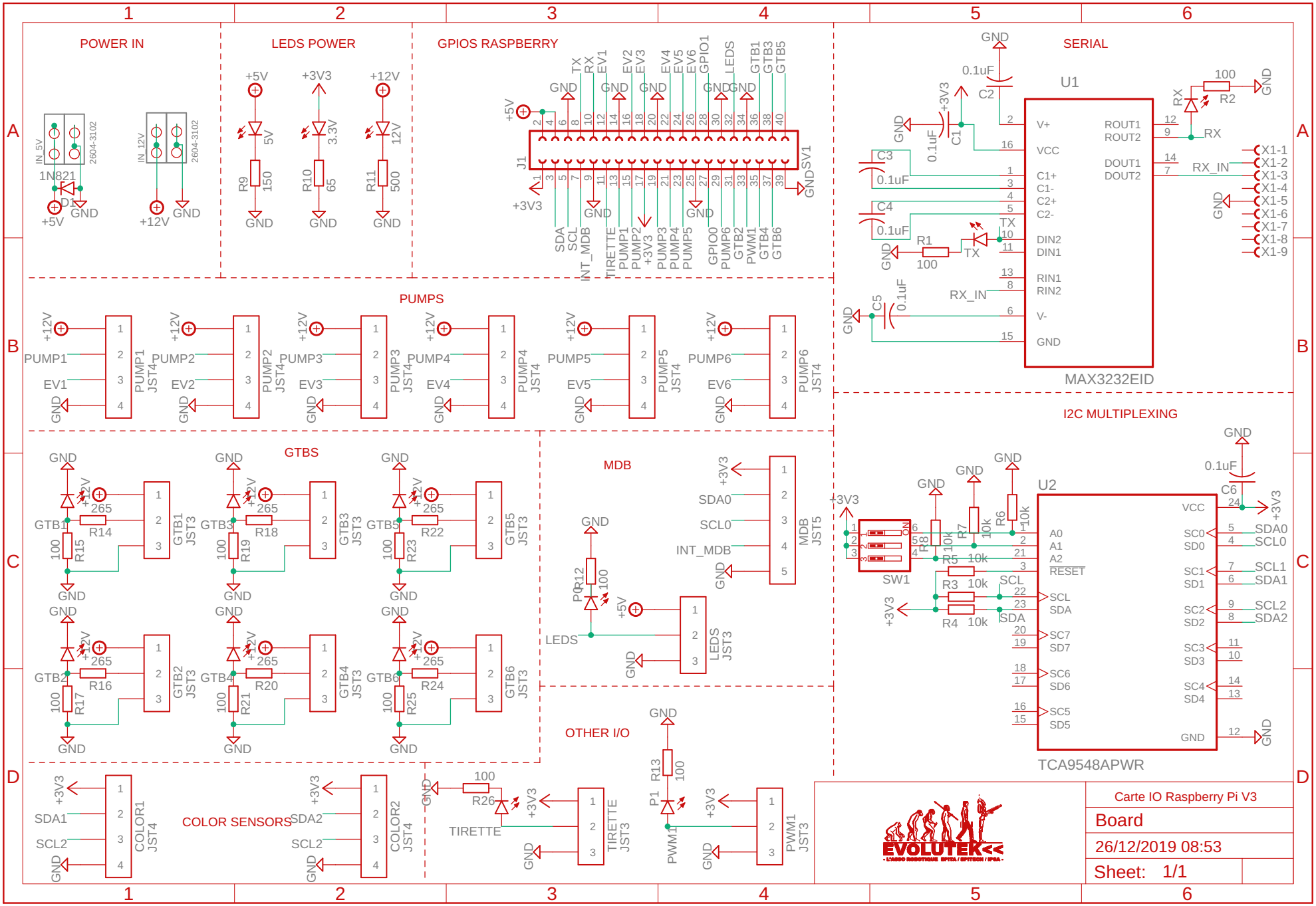
POWER IN
LEDS POWER
GPIOS RASPBERRY
SERIAL
PUMPS
GTBS
MDB
I2C MULTIPLEXING
OTHER I/O
COLOR SENSORS
MAX3232EID
TCA9548APWR
Carte IO Raspberry Pi V3
Board
26/12/2019 08:53
Sheet: 1/1