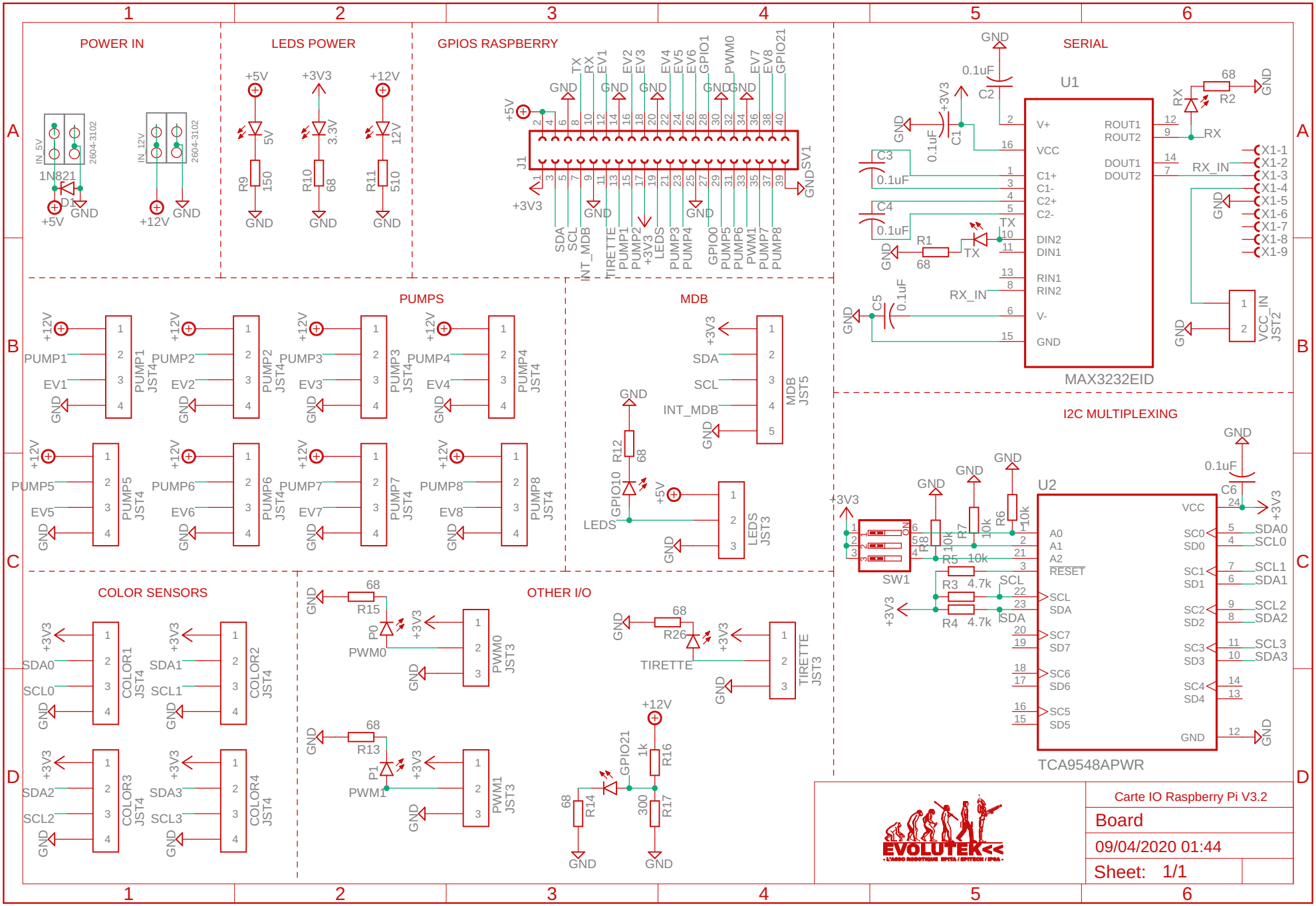

10/04/2020 19:51 C:\Users\corentin vigourt\Documents\carte-io-raspberry\CarteIO V3\Board.sch (Sheet: 1/1)