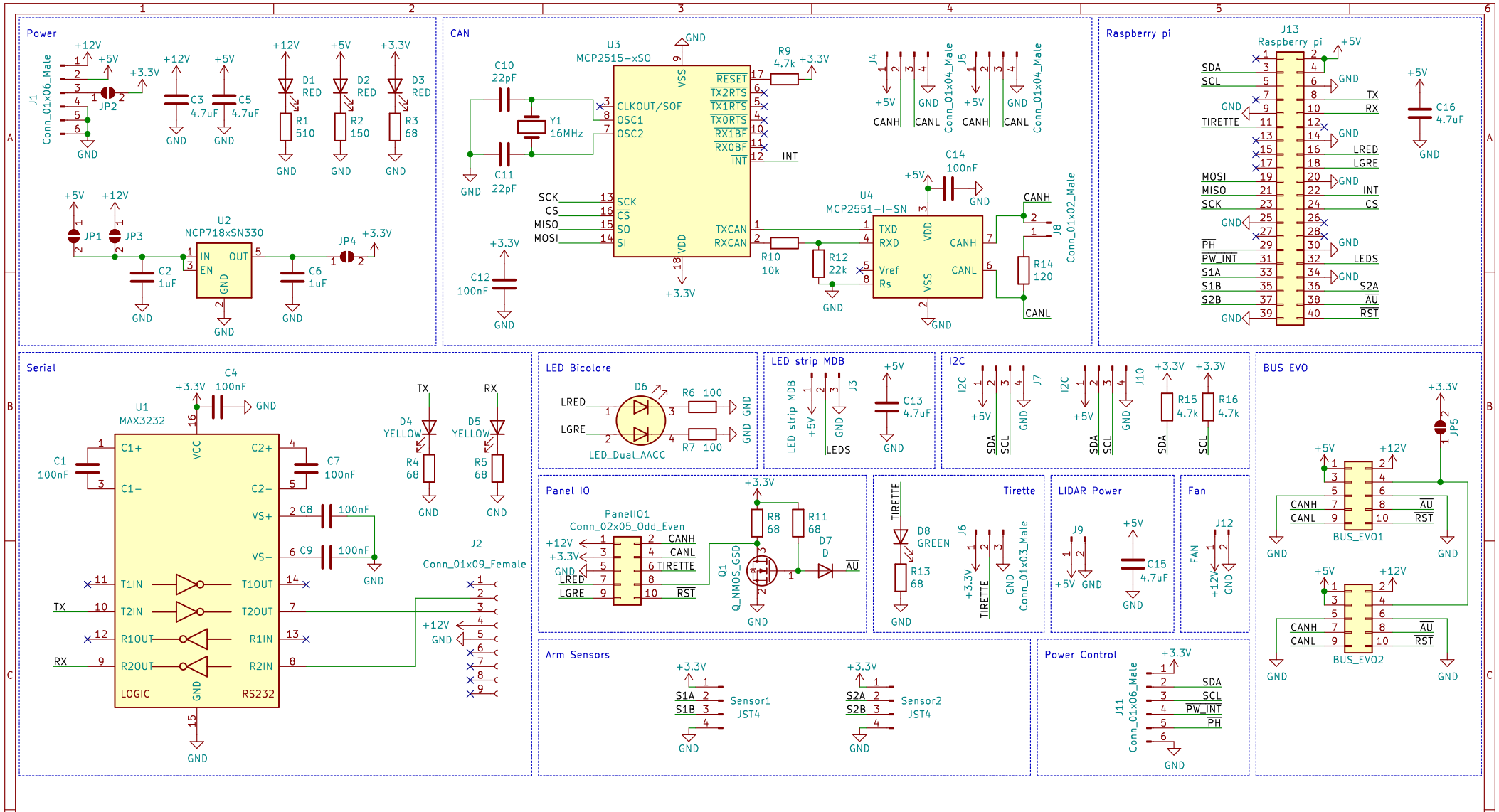
Power
J1 Conn_01x06_Male
JP2
C3 4.7uF
C5 4.7uF
D1 RED
D2 RED
D3 RED
R1 510
R2 150
R3 68
JP1
JP3
U2 NCP718xSN330
C2 1uF
C6 1uF
JP4
CAN
U3 MCP2515-xSO
C10 22pF
C11 22pF
Y1 16MHz
R9 4.7k
C12 100nF
R10 10k
R12 22k
U4 MCP2551-I-SN
C14 100nF
R14 120
J4 Conn_01x04_Male
J5 Conn_01x04_Male
J8 Conn_01x02_Male
Raspberry pi
J13 Raspberry pi
C16 4.7uF
Serial
U1 MAX32232
C1 100nF
C4 100nF
C7 100nF
C8 100nF
C9 100nF
D4 YELLOW
D5 YELLOW
R4 68
R5 68
J2 Conn_01x09_Female
LED Bicolore
D6
R6 100
R7 100
LED_Dual_AACC
LED strip MDB
J3
C13 4.7uF
I2C
J7
J10
R15 4.7k
R16 4.7k
BUS EVO
JP5
BUS_EVO1
BUS_EVO2
Panel IO
PanelIO1 Conn_02x05_Odd_Even
R8 68
R11 68
D7 D
Q1 Q_NMOS_GSD
Tirette
D8 GREEN
R13 68
J6 Conn_01x03_Male
LIDAR Power
J9
C15 4.7uF
Fan
J12
Arm Sensors
Sensor1 JST4
Sensor2 JST4
Power Control
J11 Conn_01x06_Male
Evolutek<< & Coffee Machine
Sheet: /
File: CarteIO_V5.sch
Title: CarteIO Raspberry Pi
Size: A4
Date: 2022-03-14
Rev: V5
KiCad E.D.A. kicad (5.1.10)-1
Id: 1/1