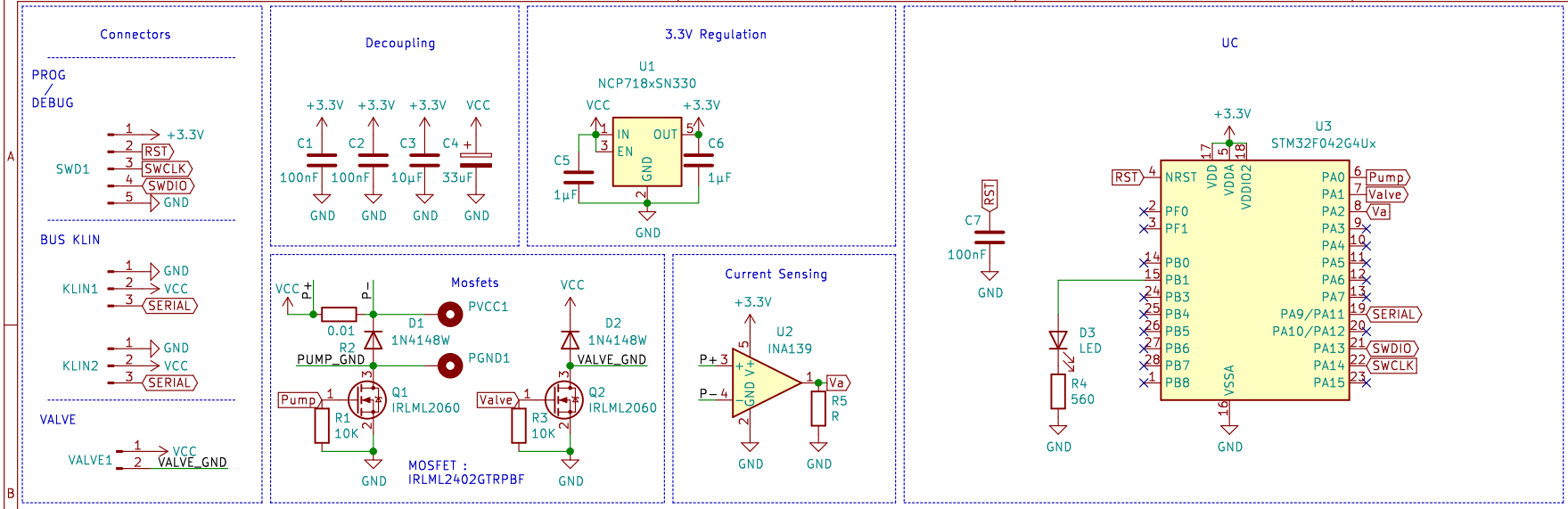

TODO : Label for possible values of R5

PX12 Project

Sheet: /

File: PX12_Board.sch

Title: PX12 Board

Size: A4	Date: 2020-11-29	**Rev: V1.0**
KiCad E.D.A. kicad (5.1.8)-1		Id: 1/1