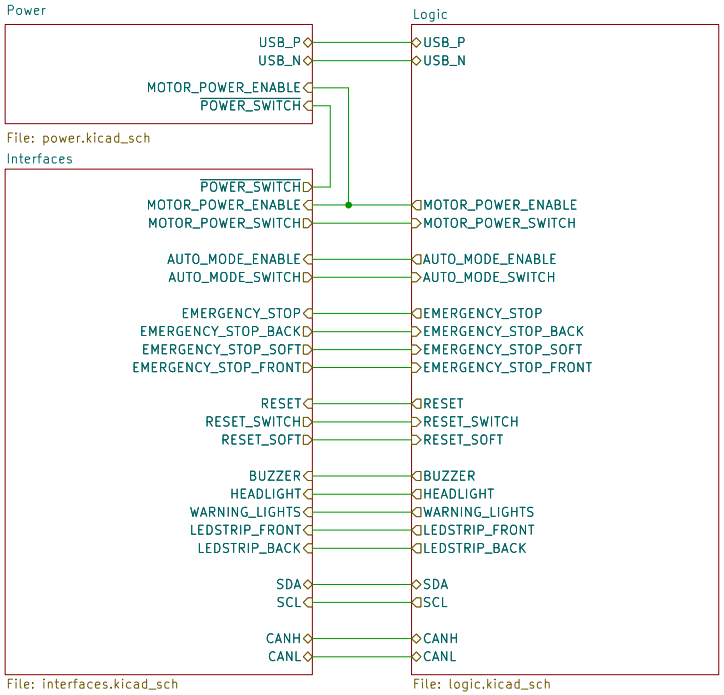

Evolutek<<
Sheet: Root
File: Mainboard.k
Title: Cart'O
Size: A4
KiCad E.D.A. 9.0.6

EVOLUTEK<<
- L'ASSO ROBOTIQUE EPITA / EPITECH / IPSA - V1.0

Id: 1/4

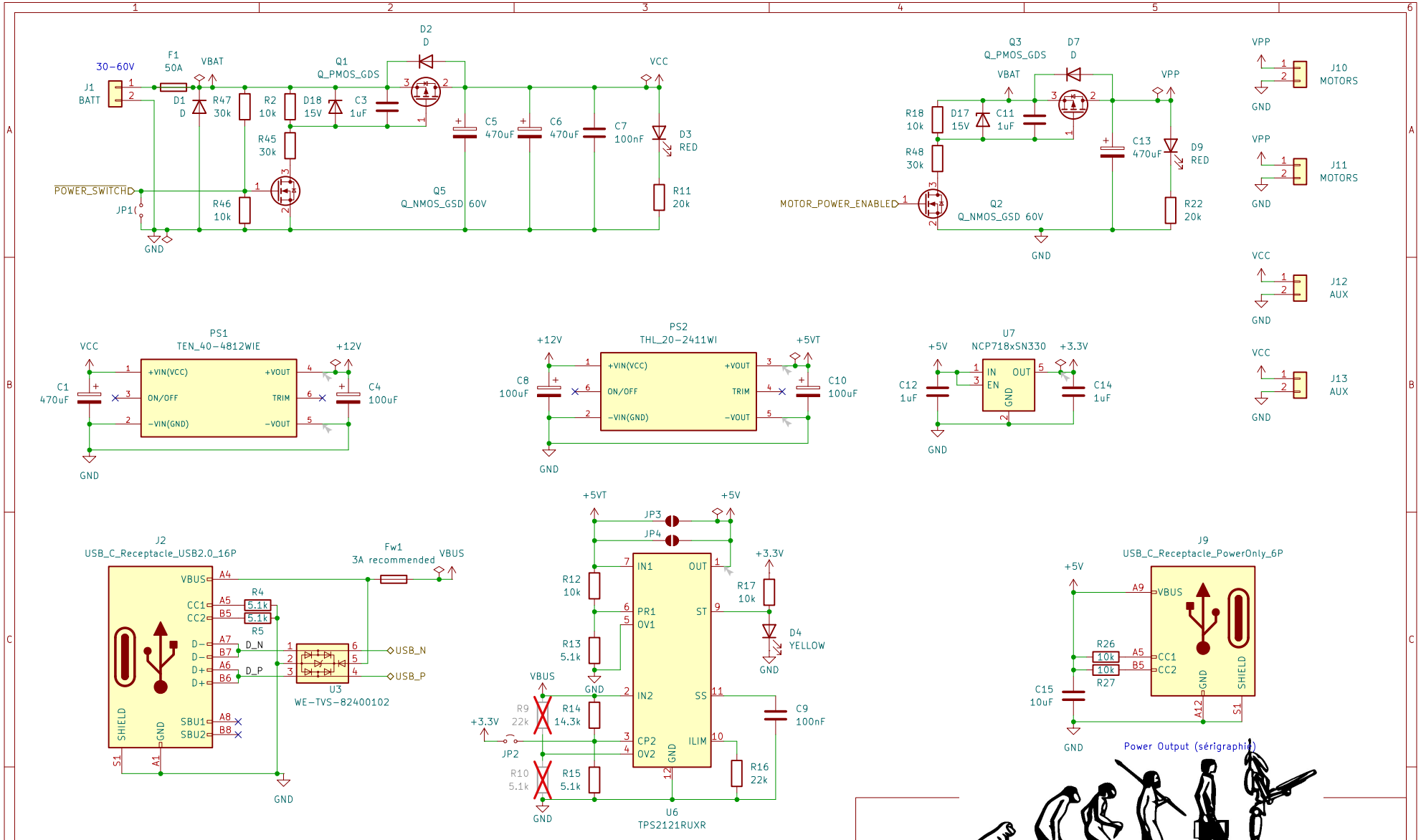
J1
BATT
30-60V
F1
50A
VBAT
D1
D
R47
30k
R2
10k
R45
30k
R46
10k
D18
15V
C3
1uF
Q1
Q_PMOS_GDS
D2
D
VCC
C5
470uF
C6
470uF
C7
100nF
D3
RED
R11
20k
Q5
Q_NMOS_GSD 60V
POWER_SWITCH
JP1
GND
Q3
Q_PMOS_GDS
D7
D
R18
10k
D17
15V
C11
1uF
R48
30k
C13
470uF
D9
RED
R22
20k
Q2
Q_NMOS_GSD 60V
MOTOR_POWER_ENABLED
VPP
J10
MOTORS
J11
MOTORS
J12
AUX
J13
AUX
PS1
TEN_40-4812WIE
+VIN(VCC)
ON/OFF
-VIN(GND)
+VOUT
TRIM
-VOUT
C1
470uF
C4
100uF
+12V
PS2
THL_20-2411WI
C8
100uF
C10
100uF
+5VT
U7
NCP718xSN330
IN
EN
OUT
GND
C12
1uF
C14
1uF
+5V
+3.3V
J2
USB_C_Receptacle_USB2.0_16P
VBUS
CC1
CC2
D-
D+
SBU1
SBU2
SHIELD
R4
5.1k
R5
5.1k
D_N
D_P
U3
WE-TVS-82400102
USB_N
USB_P
Fw1
3A recommended
JP3
JP4
IN1
PR1
OV1
IN2
CP2
OV2
OUT
ST
SS
ILIM
R12
10k
R13
5.1k
R14
14.3k
R15
5.1k
R16
22k
R17
10k
D4
YELLOW
C9
100nF
R9
22k
R10
5.1k
JP2
U6
TPS2121RUXR
J9
USB_C_Receptacle_PowerOnly_6P
R26
10k
R27
10k
C15
10uF
Power Output (sérigraphie)
TODO:
- Explain JP1, JP2, JP3 & JP4, R29 & R10
- Sillscreen complete for connectors
BACKLOG:
- Power delivery before 12V regulator?
- Current / Voltage sensors ?
Evolutek<<
Sheet: Power
File: power.kicad
Title: Cart'O
Size: A4
KiCad E.D.A. 9.0.6
EVOLUTEK<<
- L'ASSO ROBOTIQUE EPITA / EPITECH / IPSA -
V1.0
Id: 2/4

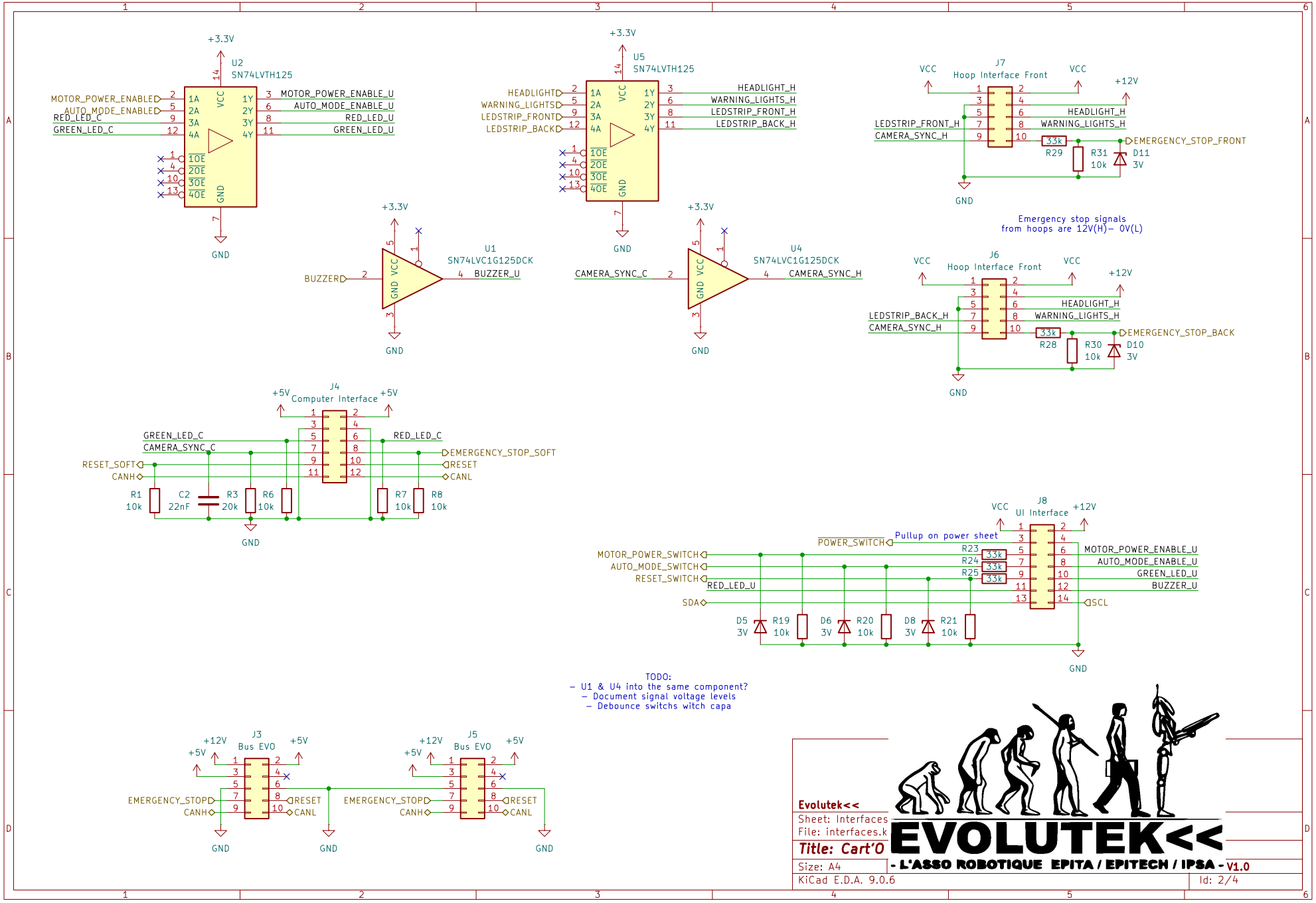
U2
SN74LVTH125
MOTOR_POWER_ENABLE
AUTO_MODE_ENABLE
RED_LED_C
GREEN_LED_C
MOTOR_POWER_ENABLE_U
AUTO_MODE_ENABLE_U
RED_LED_U
GREEN_LED_U
U5
SN74LVTH125
HEADLIGHT
WARNING_LIGHTS
LEDSTRIP_FRONT
LEDSTRIP_BACK
HEADLIGHT_H
WARNING_LIGHTS_H
LEDSTRIP_FRONT_H
LEDSTRIP_BACK_H
U1
SN74LVC1G125DCK
BUZZER
BUZZER_U
U4
SN74LVC1G125DCK
CAMERA_SYNC_C
CAMERA_SYNC_H
J7
Hoop Interface Front
EMERGENCY_STOP_FRONT
R29 33k
R31 10k
D11 3V
Emergency stop signals
from hoops are 12V(H)– 0V(L)
J6
Hoop Interface Front
EMERGENCY_STOP_BACK
R28 33k
R30 10k
D10 3V
J4
Computer Interface
EMERGENCY_STOP_SOFT
RESET_SOFT
RESET
CANH
CANL
R1 10k
C2 22nF
R3 20k
R6 10k
R7 10k
R8 10k
J8
UI Interface
Pullup on power sheet
POWER_SWITCH
MOTOR_POWER_SWITCH
AUTO_MODE_SWITCH
RESET_SWITCH
SDA
SCL
R23 33k
R24 33k
R25 33k
D5 3V
R19 10k
D6 3V
R20 10k
D8 3V
R21 10k
TODO:
– U1 & U4 into the same component?
– Document signal voltage levels
– Debounce switchs witch capa
J3
Bus EVO
J5
Bus EVO
EMERGENCY_STOP
RESET
CANH
CANL
Evolutek<<
Sheet: Interfaces
File: interfaces.k
Title: Cart'O
Size: A4
KiCad E.D.A. 9.0.6
EVOLUTEK<<
- L'ASSO ROBOTIQUE EPITA / EPITECH / IPSA -
V1.0
Id: 2/4

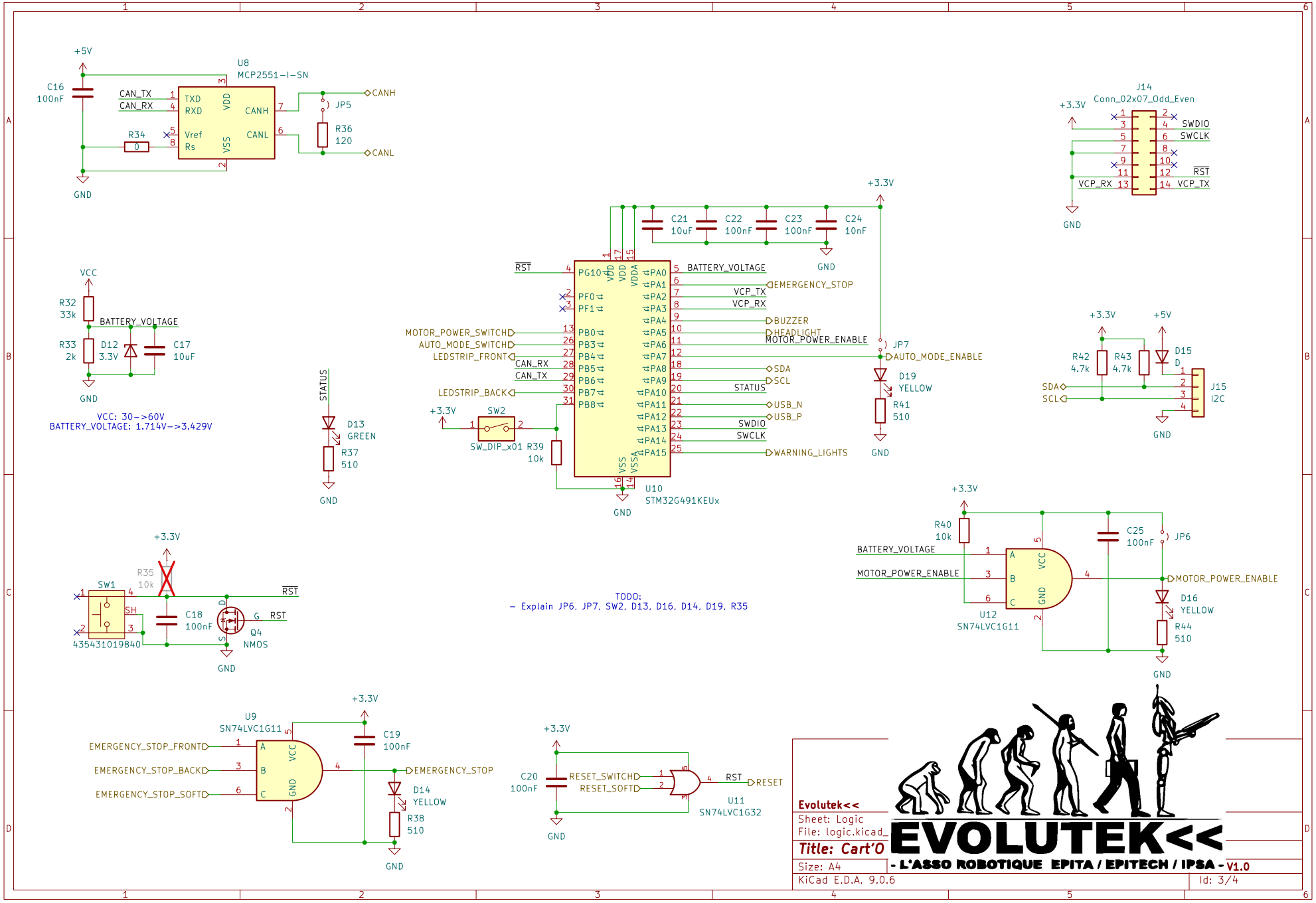
U8
MCP2551-I-SN
C16
100nF
CAN_TX
CAN_RX
TXD
RXD
Vref
Rs
VDD
VSS
CANH
CANL
R34
0
JP5
R36
120
CANH
CANL
GND
+5V
J14
Conn_02x07_Odd_Even
+3.3V
SWDIO
SWCLK
RST
VCP_RX
VCP_TX
GND
VCC
R32
33k
R33
2k
D12
3.3V
C17
10uF
BATTERY_VOLTAGE
GND
VCC: 30->60V
BATTERY_VOLTAGE: 1.714V->3.429V
STATUS
D13
GREEN
R37
510
GND
C21
10uF
C22
100nF
C23
100nF
C24
10nF
+3.3V
GND
RST
PG10
PF0
PF1
PB0
PB3
PB4
PB5
PB6
PB7
PB8
VDD
VDDA
VSS
VSSA
PA0
PA1
PA2
PA3
PA4
PA5
PA6
PA7
PA8
PA9
PA10
PA11
PA12
PA13
PA14
PA15
BATTERY_VOLTAGE
EMERGENCY_STOP
VCP_TX
VCP_RX
BUZZER
HEADLIGHT
MOTOR_POWER_ENABLE
AUTO_MODE_ENABLE
SDA
SCL
STATUS
USB_N
USB_P
SWDIO
SWCLK
WARNING_LIGHTS
MOTOR_POWER_SWITCH
AUTO_MODE_SWITCH
LEDSTRIP_FRONT
CAN_RX
CAN_TX
LEDSTRIP_BACK
+3.3V
SW2
SW_DIP_x01
R39
10k
U10
STM32G491KEUx
GND
JP7
D19
YELLOW
R41
510
GND
+3.3V
+5V
R42
4.7k
R43
4.7k
D15
D
SDA
SCL
J15
I2C
GND
+3.3V
SW1
R35
10k
SH
435431019840
C18
100nF
RST
Q4
NMOS
GND
+3.3V
R40
10k
BATTERY_VOLTAGE
MOTOR_POWER_ENABLE
U12
SN74LVC1G11
VCC
GND
C25
100nF
JP6
MOTOR_POWER_ENABLE
D16
YELLOW
R44
510
GND
TODO:
- Explain JP6, JP7, SW2, D13, D16, D14, D19, R35
U9
SN74LVC1G11
+3.3V
EMERGENCY_STOP_FRONT
EMERGENCY_STOP_BACK
EMERGENCY_STOP_SOFT
VCC
GND
C19
100nF
EMERGENCY_STOP
D14
YELLOW
R38
510
GND
+3.3V
C20
100nF
RESET_SWITCH
RESET_SOFT
RST
RESET
U11
SN74LVC1G32
GND
Evolutek<<
Sheet: Logic
File: logic.kicad_
Title: Cart'O
Size: A4
KiCad E.D.A. 9.0.6
EVOLUTEK<<
- L'ASSO ROBOTIQUE EPITA / EPITECH / IPSA -
V1.0
Id: 3/4