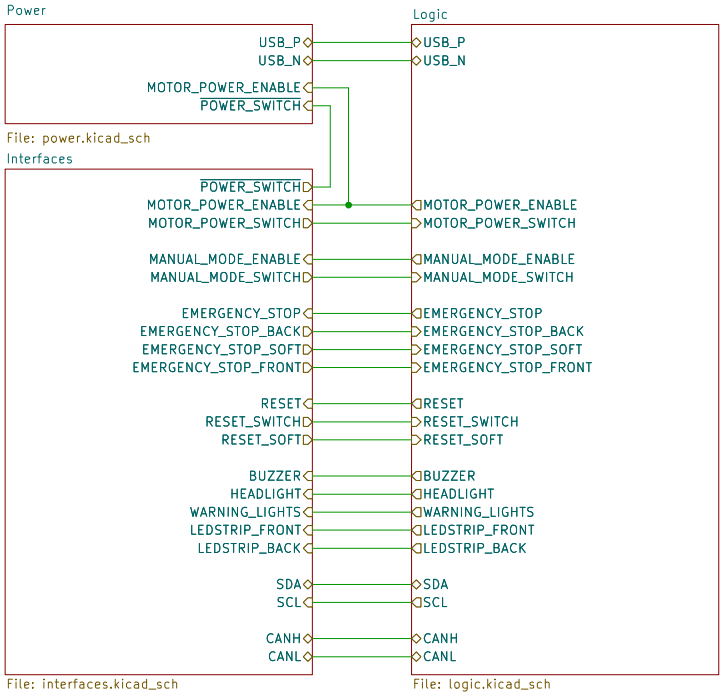

Evolutek<<

Sheet: Root
File: Mainboard.kicad_sch

Title: Cart'O Lutek Mainboard

Size: A4	Date: 2025-12-13	**Rev: V1.0**
KiCad E.D.A. 9.0.6		Id: 1/4

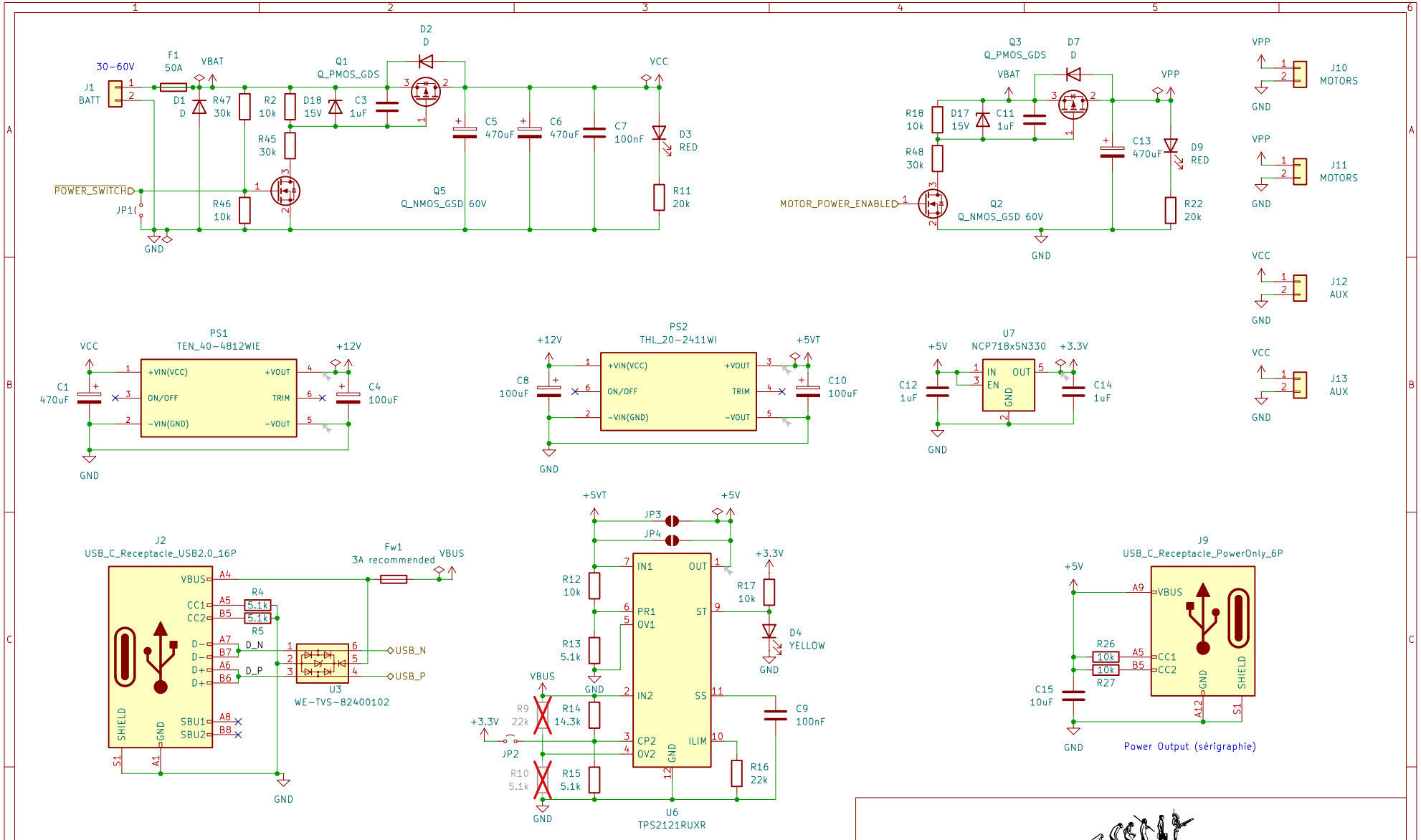

TODO:
- Explain JP1, JP2, JP3 & JP4, R29 & R10
- Sillscreen complete for connectors

BACKLOG:
- Power delivery before 12V regulator?
- Current / Voltage sensors ?

Evolutek<<

Sheet: Power
File: power.kicad_sch

Title: Cart'O Lutek Mainboard

Size: A4	Date: 2025-12-13	**Rev: V1.0**
KiCad E.D.A. 9.0.6		Id: 2/4

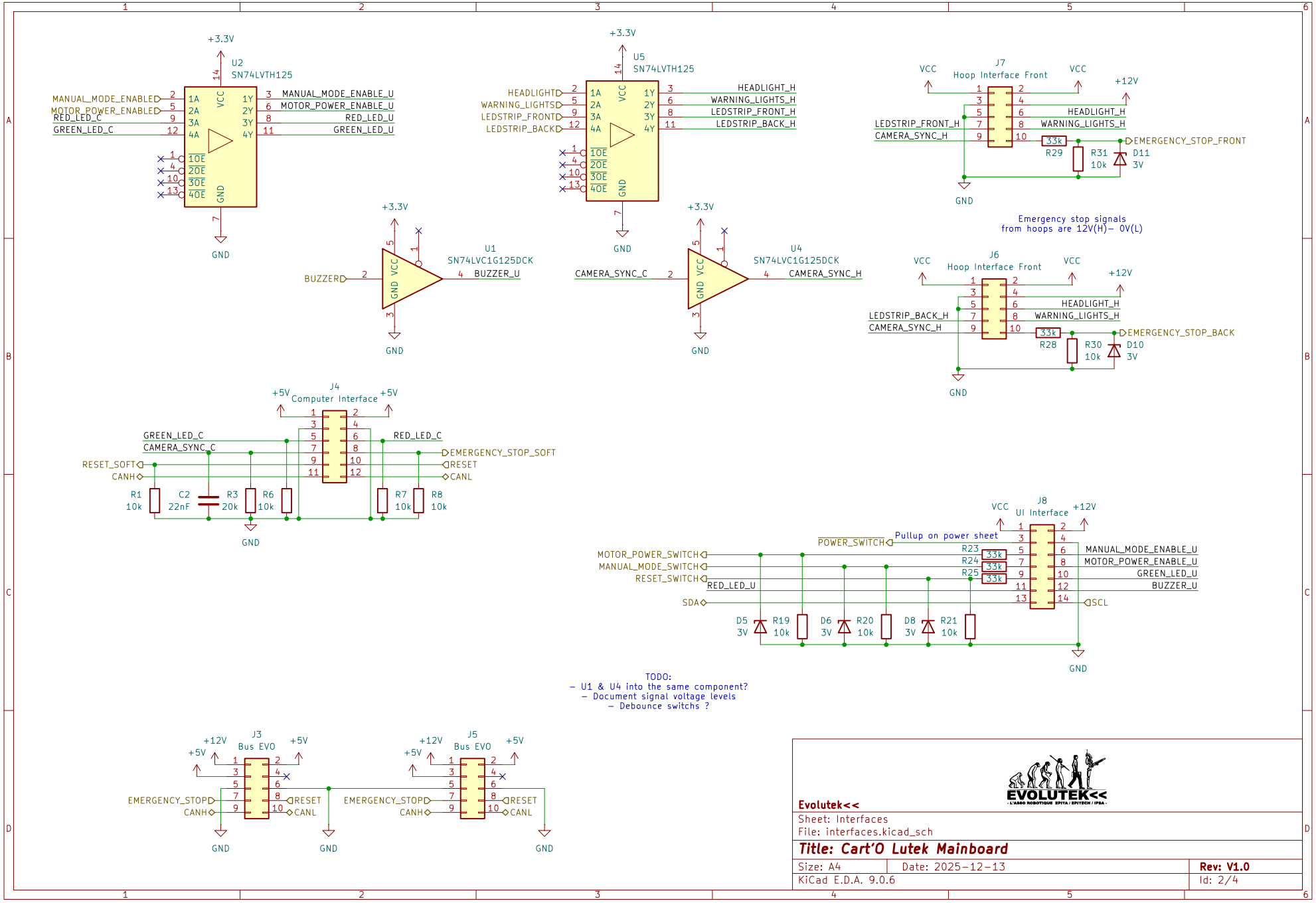

Evolutek<<

Sheet: Interfaces

File: interfaces.kicad_sch

Title: Cart'O Lutek Mainboard

Size: A4	Date: 2025-12-13	Rev: V1.0
KiCad E.D.A. 9.0.6		Id: 2/4

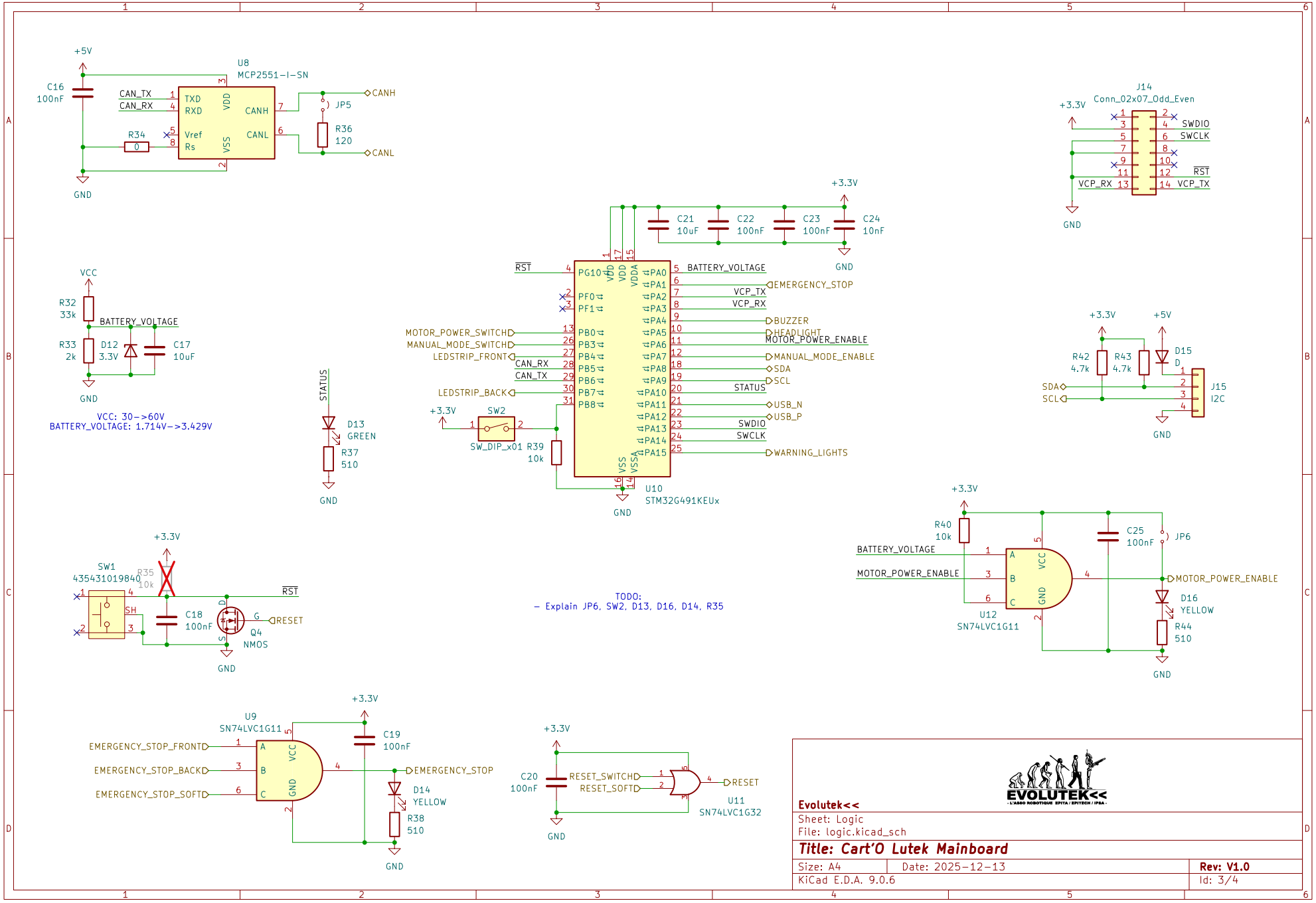
U8
MCP2551-I-SN
C16
100nF
+5V
GND
CAN_TX
CAN_RX
TXD
RXD
VDD
CANH
CANL
Vref
Rs
VSS
R34
0
JP5
R36
120
CANH
CANL
J14
Conn_02x07_Odd_Even
+3.3V
SWDIO
SWCLK
RST
VCP_RX
VCP_TX
GND
C21
10uF
C22
100nF
C23
100nF
C24
10nF
U10
STM32G491KEUx
PG10
PF0
PF1
PB0
PB3
PB4
PB5
PB6
PB7
PB8
PA0
PA1
PA2
PA3
PA4
PA5
PA6
PA7
PA8
PA9
PA10
PA11
PA12
PA13
PA14
PA15
VDD
VDDA
VSS
VSSA
BATTERY_VOLTAGE
EMERGENCY_STOP
VCP_TX
VCP_RX
BUZZER
HEADLIGHT
MOTOR_POWER_ENABLE
MANUAL_MODE_ENABLE
SDA
SCL
STATUS
USB_N
USB_P
SWDIO
SWCLK
WARNING_LIGHTS
MOTOR_POWER_SWITCH
MANUAL_MODE_SWITCH
LEDSTRIP_FRONT
CAN_RX
CAN_TX
LEDSTRIP_BACK
SW2
SW_DIP_x01
R39
10k
VCC
R32
33k
R33
2k
D12
3.3V
C17
10uF
VCC: 30->60V
BATTERY_VOLTAGE: 1.714V->3.429V
STATUS
D13
GREEN
R37
510
R42
4.7k
R43
4.7k
D15
D
J15
I2C
SDA
SCL
SW1
435431019840
R35
10k
SH
C18
100nF
Q4
NMOS
RESET
TODO:
- Explain JP6, SW2, D13, D16, D14, R35
R40
10k
C25
100nF
JP6
U12
SN74LVC1G11
MOTOR_POWER_ENABLE
D16
YELLOW
R44
510
U9
SN74LVC1G11
EMERGENCY_STOP_FRONT
EMERGENCY_STOP_BACK
EMERGENCY_STOP_SOFT
C19
100nF
EMERGENCY_STOP
D14
YELLOW
R38
510
C20
100nF
RESET_SWITCH
RESET_SOFT
RESET
U11
SN74LVC1G32
Evolutek<<
Sheet: Logic
File: logic.kicad_sch
Title: Cart'O Lutek Mainboard
Size: A4
Date: 2025-12-13
Rev: V1.0
KiCad E.D.A. 9.0.6
Id: 3/4