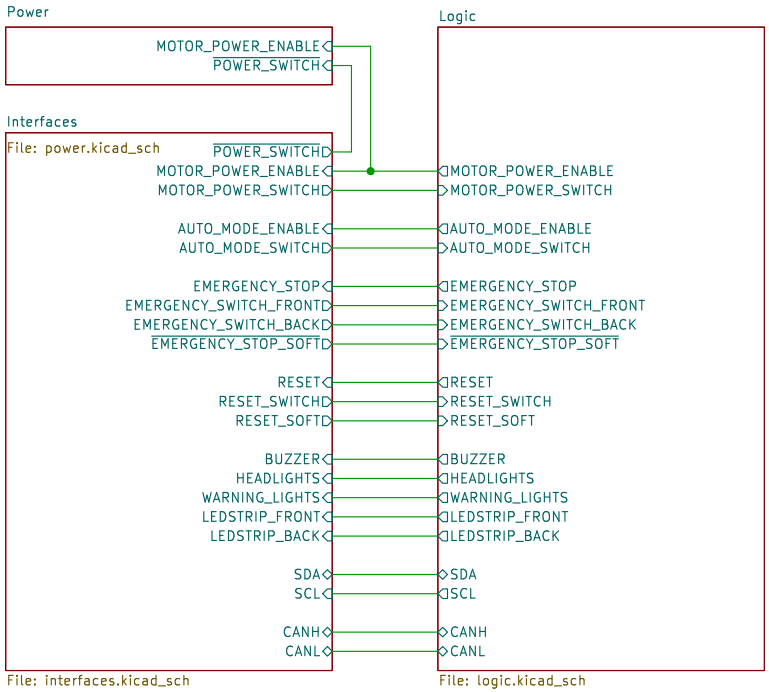

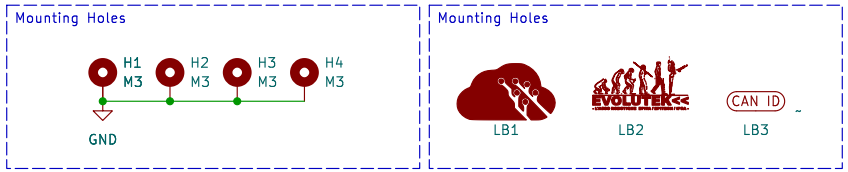

Evolutek<<		
Sheet: Root		
File: Mainboard.kicad_sch		
Title: Cart'O Lutek Mainboard		
Size: A4	Date: 2026-01-09	Rev: V1.0
KiCad E.D.A. 9.0.6		Id: 1/4

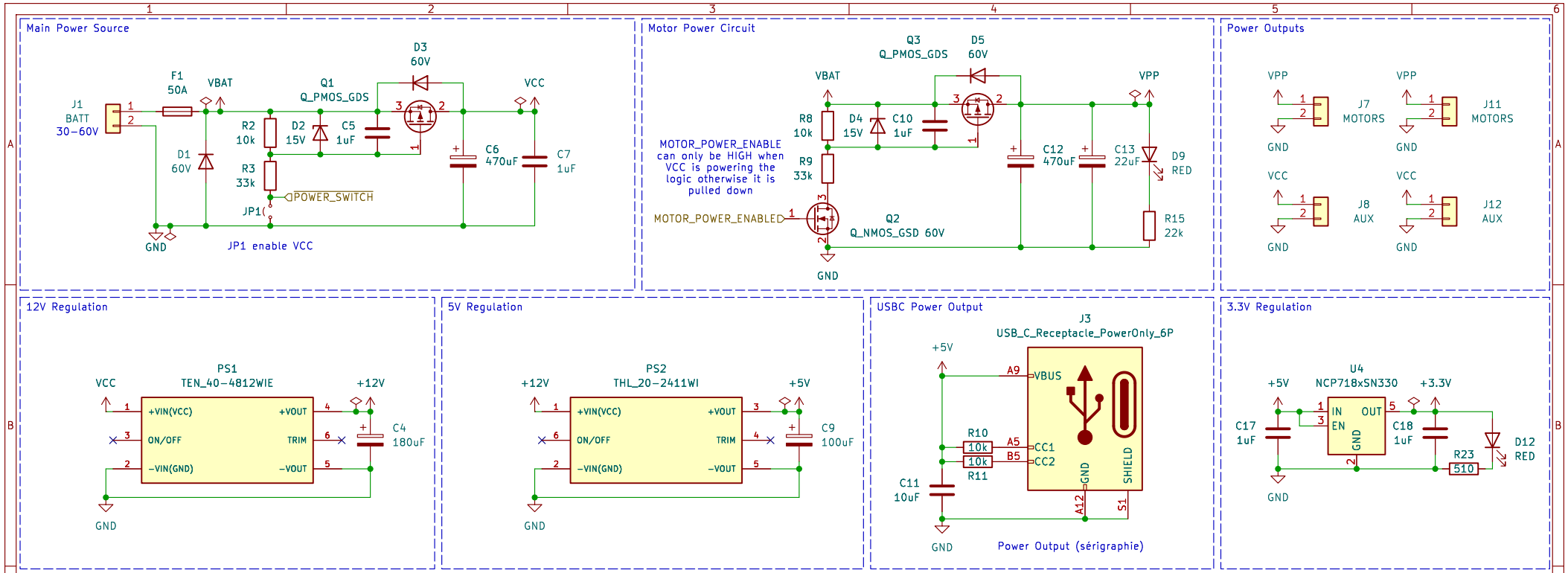

Evolutek<<

Sheet: Power
File: power.kicad_sch

Title: Cart'O Lutek Mainboard

Size: A4	Date: 2026-01-09	Rev: V1.0
KiCad E.D.A. 9.0.6		Id: 2/4

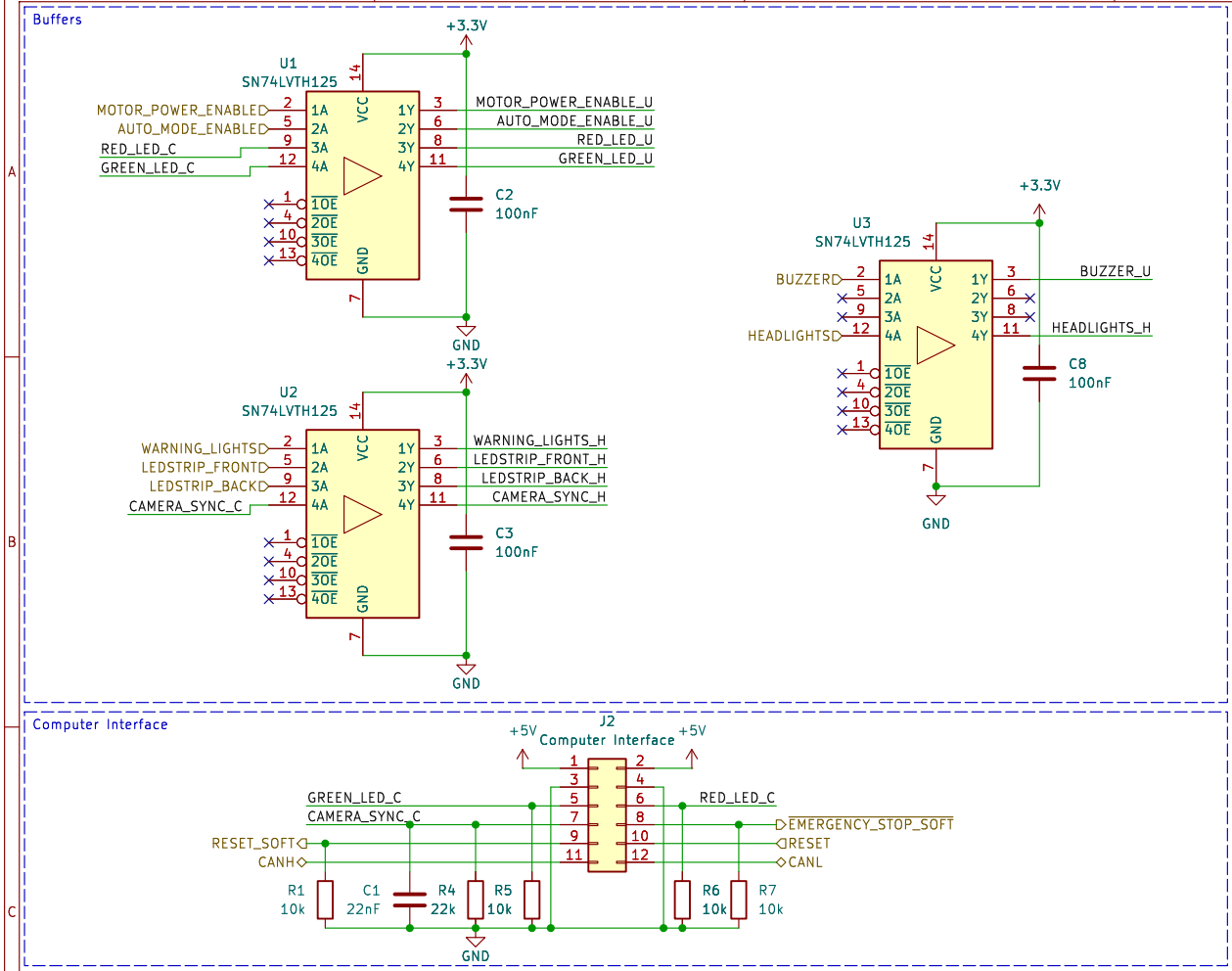

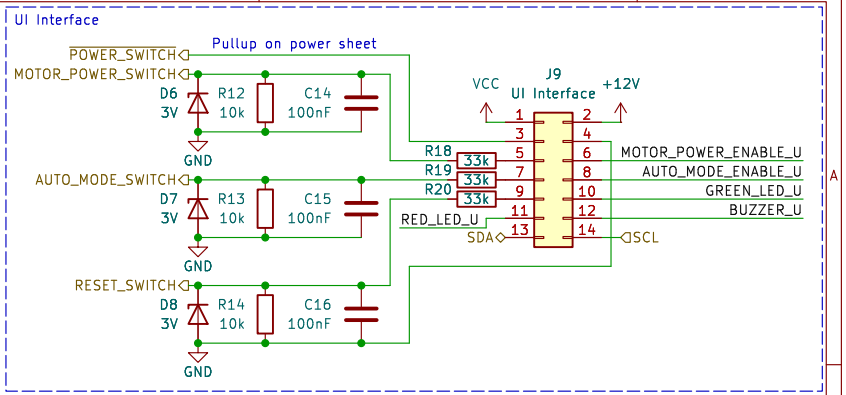

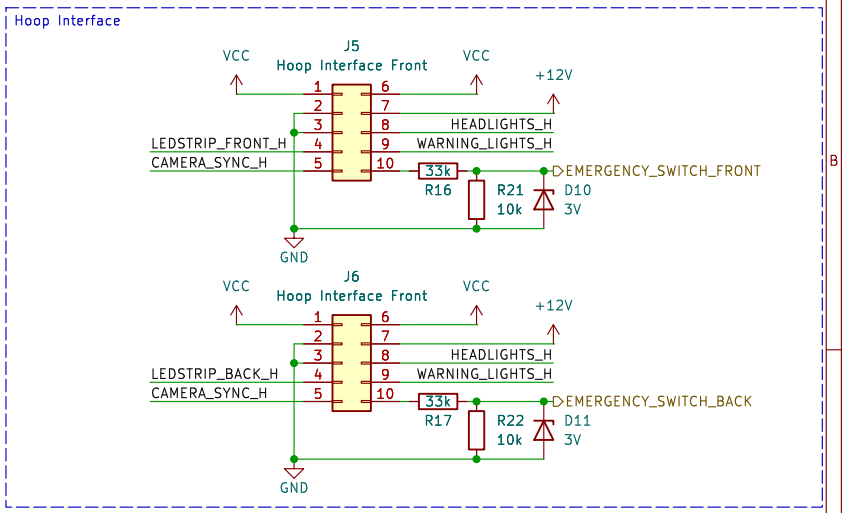

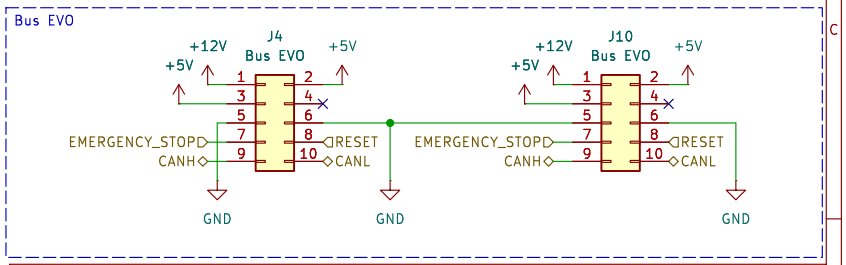

Signals documentation

UI Interface			
Signal	Range	Active Level	Direction
POWER_SWITCH	0–12V	0V (LOW)	IN
MOTOR_POWER_SWITCH	0–3V	3V (HIGH)	IN
MOTOR_POWER_ENABLE	0–3.3V	3.3V (HIGH)	OUT
AUTO_MODE_SWITCH	0–3V	3V (HIGH)	IN
AUTO_MODE_ENABLE	0–3.3V	3.3V (HIGH)	OUT
RESET	0–3V	3V (HIGH)	IN
GREEN_LED	0–3.3V	3.3V (HIGH)	OUT
RED_LED	0–3.3V	3.3V (HIGH)	OUT
SDA	0–3.3V	N/A	BI
SCL	0–3.3V	N/A	OUT

Bus EVO			
Signal	Range	Active Level	Direction
EMERGENCY_STOP	0–3.3V	3.3V (HIGH)	OUT
RESET	0–3.3V	3.3V (HIGH)	OUT
CANH	0–5V	N/A	BI
CANL	0–5V	N/A	BI

HOOP INTERFACE			
Signal	Range	Active Level	Direction
HEADLIGHS	0–3.3V	3.3V (HIGH)	OUT
LEDSTRIP_FRONT/BACK	0–3.3V	3.3V (HIGH)	OUT
WARNING_LIGHTS	0–3.3V	3.3V (HIGH)	OUT
EMERGENCY_SWITCH_FRONT/BACK	0–3V	3V (HIGH)	IN

Computer Interface			
Signal	Range	Active Level	Direction
GREEN_LED	0–3.3V	3.3V (HIGH)	IN
RED_LED	0–3.3V	3.3V (HIGH)	IN
CAMERA_SYNC	0–3.3V	3.3V (HIGH)	IN
EMERGENCY_STOP_SOFT	0–3.3V	0V (LOW)	IN
CANH	0–5V	N/A	BI
CANL	0–5V	N/A	BI

Evolutek<<

Sheet: Interfaces
File: interfaces.kicad_sch

Title: Cart'O Lutek Mainboard

Size: A4	Date: 2026-01-09	Rev: V1.0
KiCad E.D.A. 9.0.6		Id: 2/4

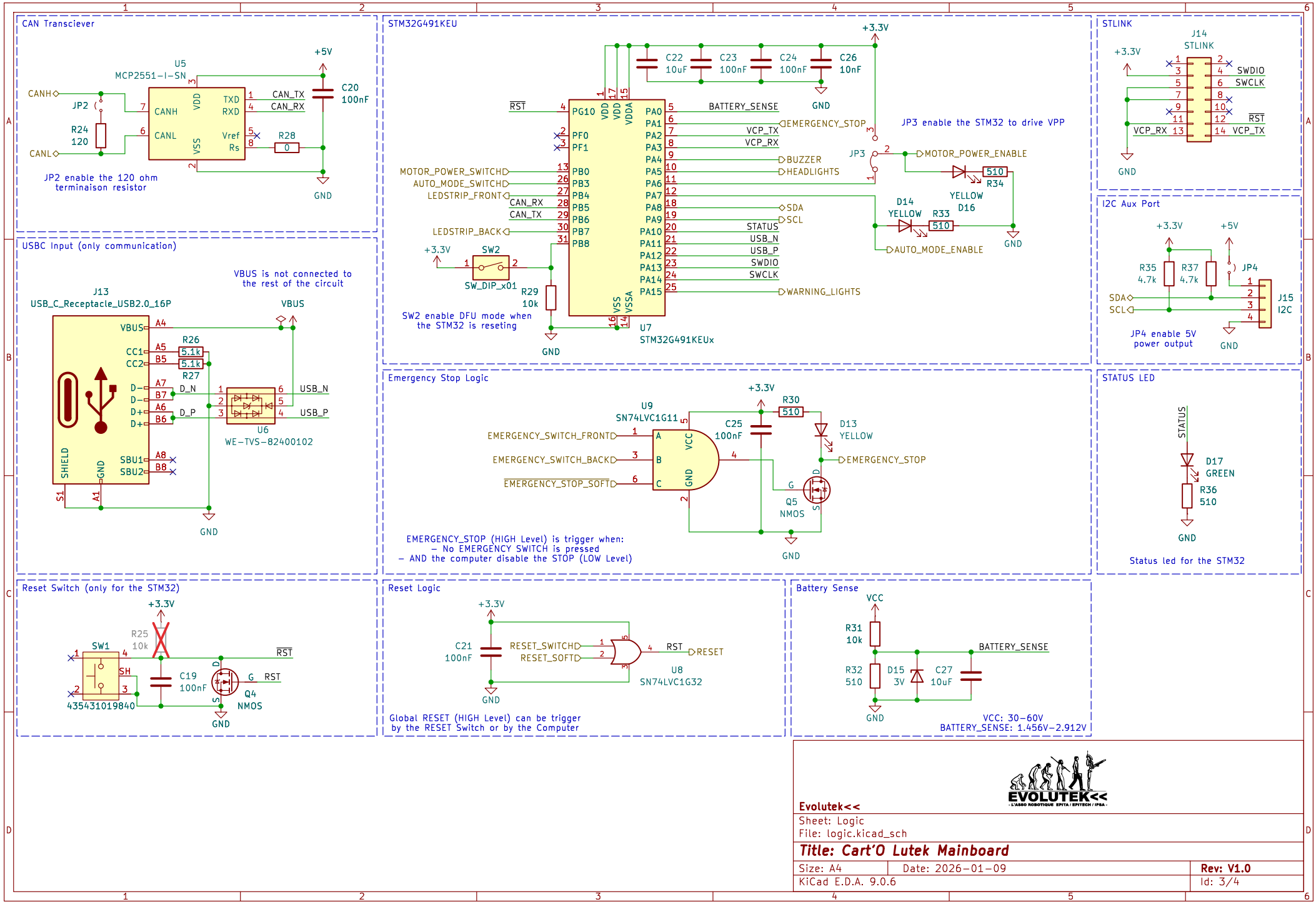
CAN Transciever
U5
MCP2551-I-SN
CANH
CANL
JP2
R24
120
CAN_TX
CAN_RX
R28
0
C20
100nF
+5V
GND
JP2 enable the 120 ohm terminaison resistor
STM32G491KEU
U7
STM32G491KEUx
C22
10uF
C23
100nF
C24
100nF
C26
10nF
+3.3V
RST
BATTERY_SENSE
EMERGENCY_STOP
VCP_TX
VCP_RX
BUZZER
HEADLIGHTS
MOTOR_POWER_SWITCH
AUTO_MODE_SWITCH
LEDSTRIP_FRONT
LEDSTRIP_BACK
SDA
SCL
STATUS
USB_N
USB_P
SWDIO
SWCLK
WARNING_LIGHTS
JP3 enable the STM32 to drive VPP
JP3
MOTOR_POWER_ENABLE
AUTO_MODE_ENABLE
D14
YELLOW
R33
510
D16
YELLOW
R34
510
SW2
SW_DIP_x01
R29
10k
SW2 enable DFU mode when the STM32 is reseting
STLINK
J14
STLINK
USBC Input (only communication)
J13
USB_C_Receptacle_USB2.0_16P
VBUS
VBUS is not connected to the rest of the circuit
R26
5.1k
R27
D_N
D_P
U6
WE-TVS-82400102
Emergency Stop Logic
U9
SN74LVC1G11
EMERGENCY_SWITCH_FRONT
EMERGENCY_SWITCH_BACK
EMERGENCY_STOP_SOFT
C25
100nF
R30
510
D13
YELLOW
Q5
NMOS
EMERGENCY_STOP (HIGH Level) is trigger when:
- No EMERGENCY SWITCH is pressed
- AND the computer disable the STOP (LOW Level)
I2C Aux Port
R35
4.7k
R37
4.7k
JP4
J15
I2C
JP4 enable 5V power output
STATUS LED
D17
GREEN
R36
510
Status led for the STM32
Reset Switch (only for the STM32)
SW1
435431019840
R25
10k
C19
100nF
Q4
NMOS
Reset Logic
C21
100nF
RESET_SWITCH
RESET_SOFT
RESET
U8
SN74LVC1G32
Global RESET (HIGH Level) can be trigger by the RESET Switch or by the Computer
Battery Sense
VCC
R31
10k
R32
510
D15
3V
C27
10uF
BATTERY_SENSE
VCC: 30-60V
BATTERY_SENSE: 1.456V-2.912V
EVOLUTEK<<
Evolutek<<
Sheet: Logic
File: logic.kicad_sch
Title: Cart'O Lutek Mainboard
Size: A4
Date: 2026-01-09
Rev: V1.0
KiCad E.D.A. 9.0.6
Id: 3/4