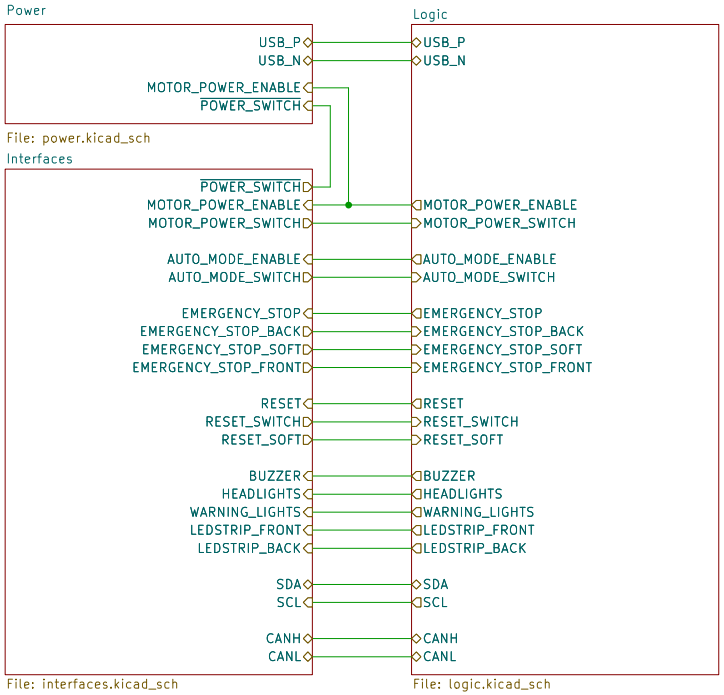

Evolutek<<

Sheet: Root
File: Mainboard.kicad_sch

Title: Cart'O Lutek Mainboard

Size: A4	Date: 2025-12-31	**Rev: V1.0**
KiCad E.D.A. 9.0.6		Id: 1/4

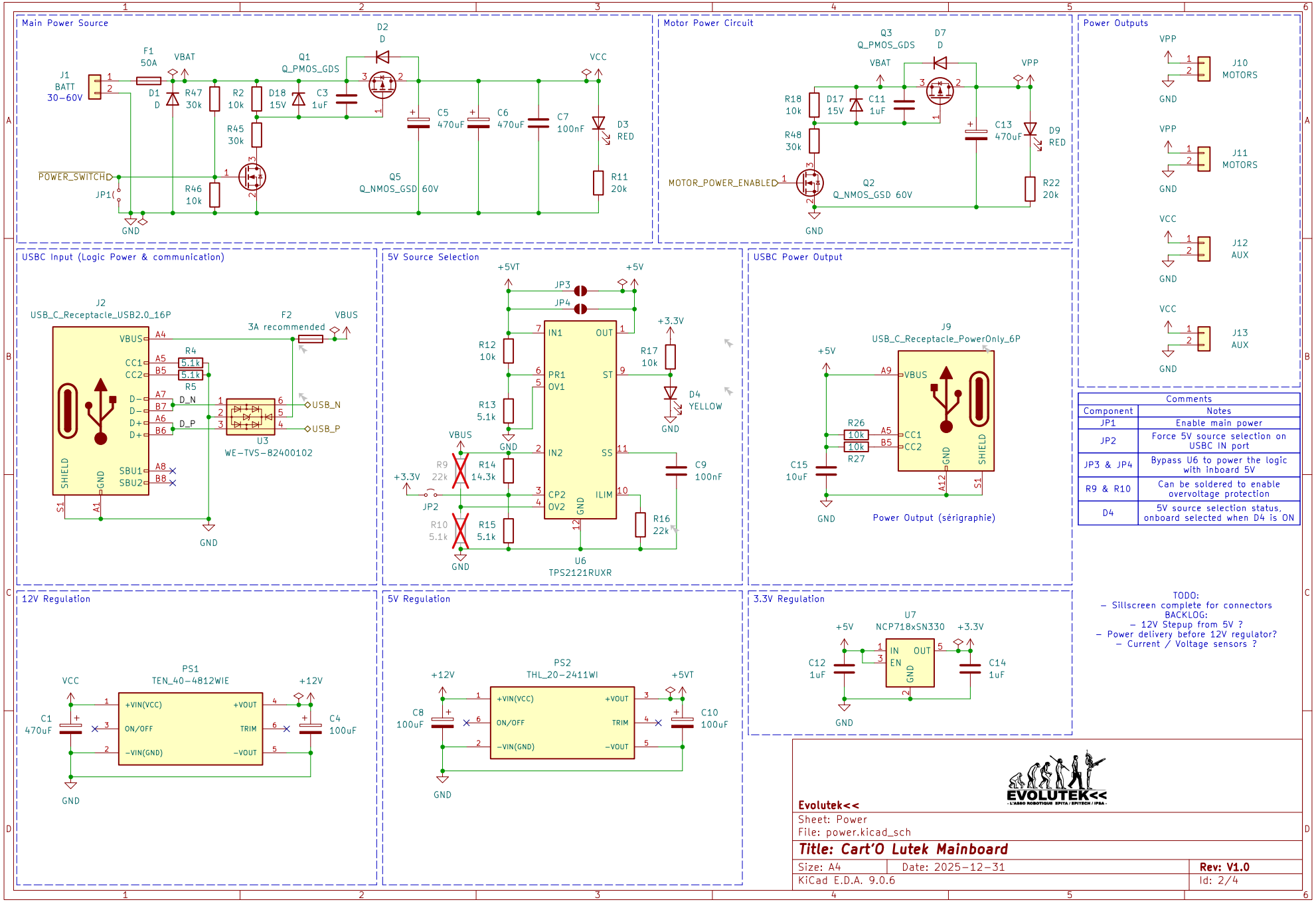

Comments	
Component	Notes
JP1	Enable main power
JP2	Force 5V source selection on USBC IN port
JP3 & JP4	Bypass U6 to power the logic with inboard 5V
R9 & R10	Can be soldered to enable overvoltage protection
D4	5V source selection status, onboard selected when D4 is ON

TODO:
- Sillscreen complete for connectors

BACKLOG:
- 12V Stepup from 5V ?
- Power delivery before 12V regulator?
- Current / Voltage sensors ?

Evolutek<<

Sheet: Power
File: power.kicad_sch

Title: Cart'O Lutek Mainboard

Size: A4	Date: 2025-12-31	**Rev: V1.0**
KiCad E.D.A. 9.0.6		Id: 2/4

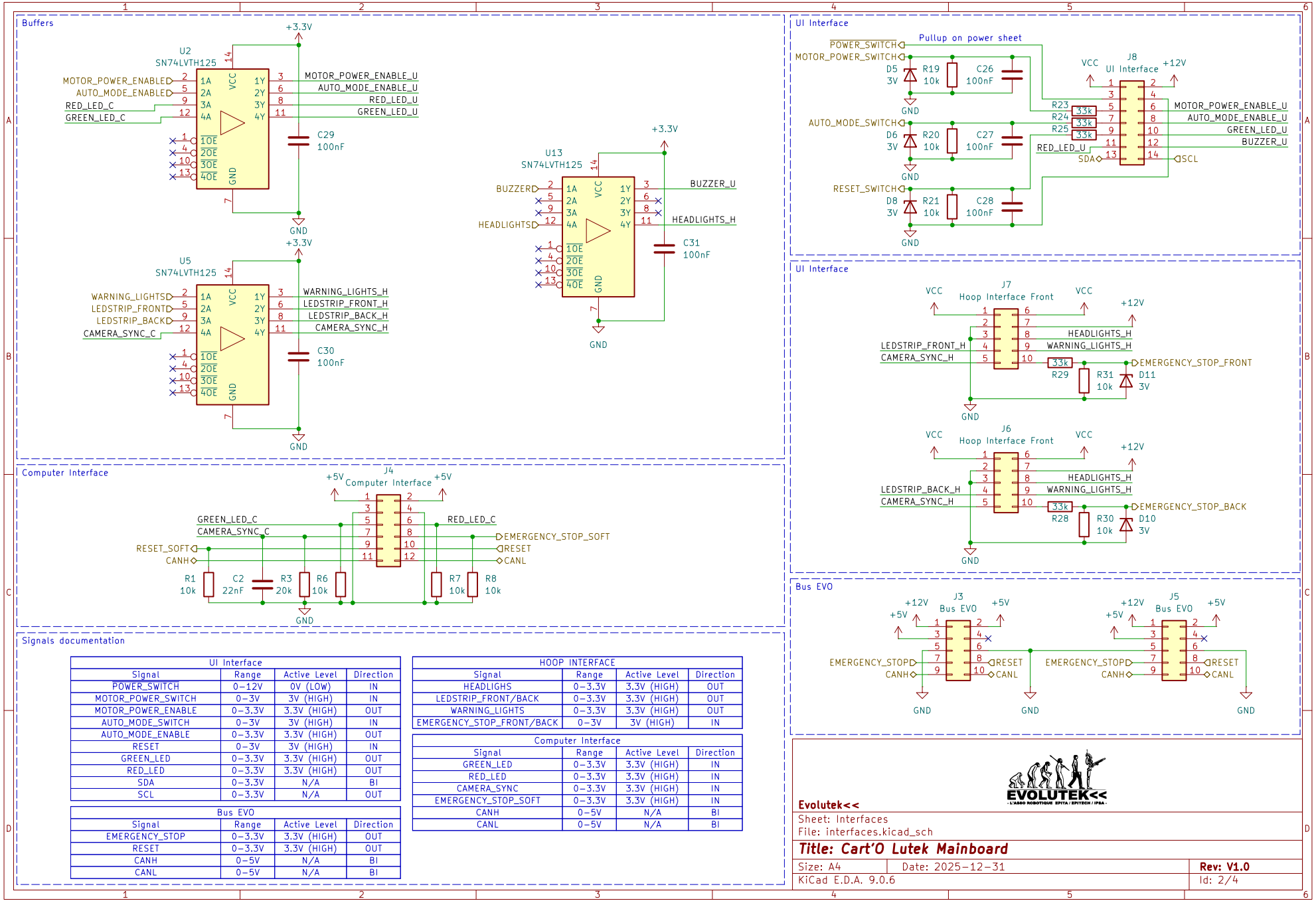

UI Interface			
Signal	Range	Active Level	Direction
POWER_SWITCH	0–12V	0V (LOW)	IN
MOTOR_POWER_SWITCH	0–3V	3V (HIGH)	IN
MOTOR_POWER_ENABLE	0–3.3V	3.3V (HIGH)	OUT
AUTO_MODE_SWITCH	0–3V	3V (HIGH)	IN
AUTO_MODE_ENABLE	0–3.3V	3.3V (HIGH)	OUT
RESET	0–3V	3V (HIGH)	IN
GREEN_LED	0–3.3V	3.3V (HIGH)	OUT
RED_LED	0–3.3V	3.3V (HIGH)	OUT
SDA	0–3.3V	N/A	BI
SCL	0–3.3V	N/A	OUT

Bus EVO			
Signal	Range	Active Level	Direction
EMERGENCY_STOP	0–3.3V	3.3V (HIGH)	OUT
RESET	0–3.3V	3.3V (HIGH)	OUT
CANH	0–5V	N/A	BI
CANL	0–5V	N/A	BI

HOOP INTERFACE			
Signal	Range	Active Level	Direction
HEADLIGHS	0–3.3V	3.3V (HIGH)	OUT
LEDSTRIP_FRONT/BACK	0–3.3V	3.3V (HIGH)	OUT
WARNING_LIGHTS	0–3.3V	3.3V (HIGH)	OUT
EMERGENCY_STOP_FRONT/BACK	0–3V	3V (HIGH)	IN

Computer Interface			
Signal	Range	Active Level	Direction
GREEN_LED	0–3.3V	3.3V (HIGH)	IN
RED_LED	0–3.3V	3.3V (HIGH)	IN
CAMERA_SYNC	0–3.3V	3.3V (HIGH)	IN
EMERGENCY_STOP_SOFT	0–3.3V	3.3V (HIGH)	IN
CANH	0–5V	N/A	BI
CANL	0–5V	N/A	BI

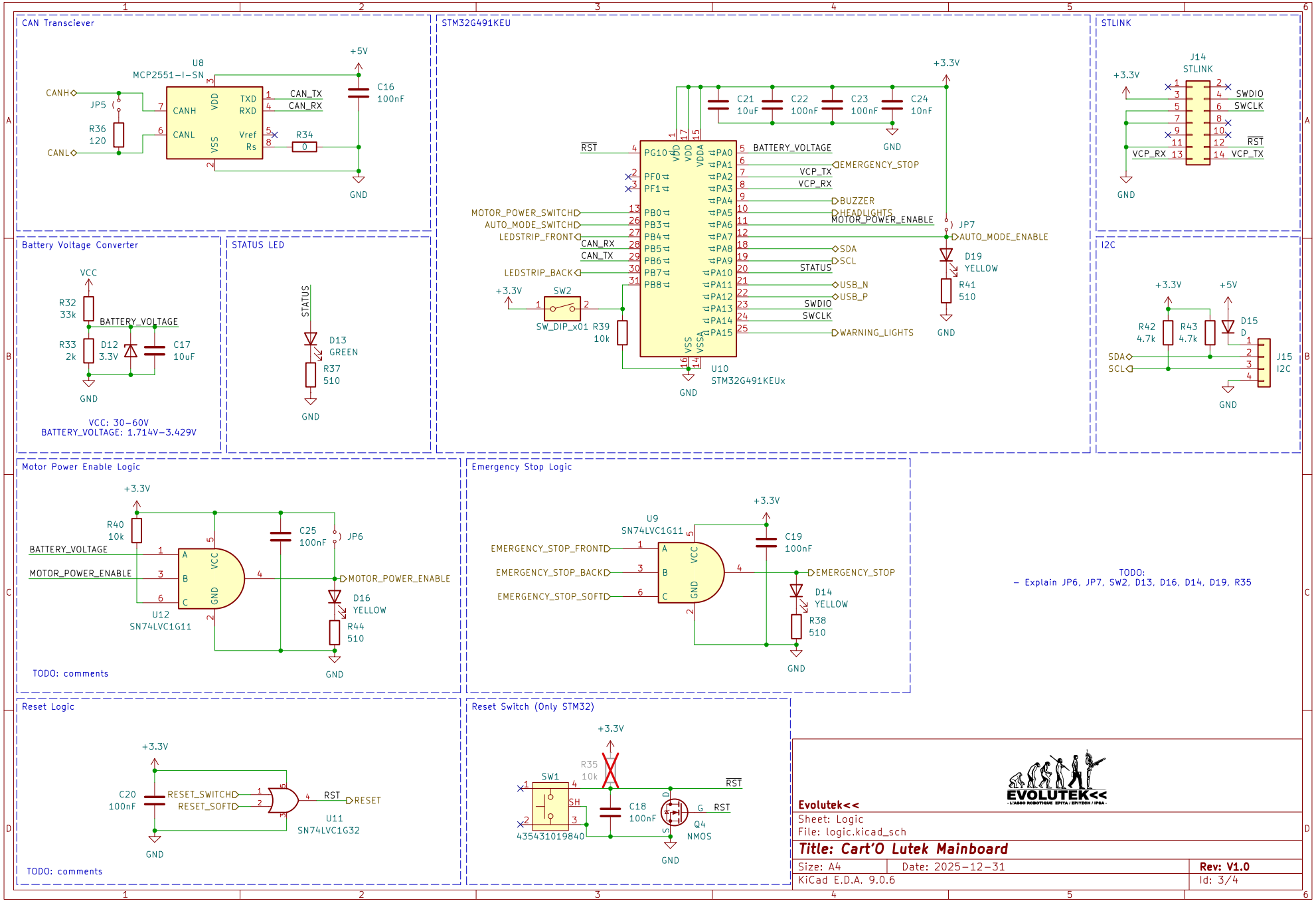
CAN Transciever
U8
MCP2551-I-SN
CANH
CANL
JP5
R36
120
CAN_TX
CAN_RX
R34
0
C16
100nF
+5V
GND
STM32G491KEU
U10
STM32G491KEUx
C21
10uF
C22
100nF
C23
100nF
C24
10nF
+3.3V
RST
BATTERY_VOLTAGE
EMERGENCY_STOP
VCP_TX
VCP_RX
BUZZER
HEADLIGHTS
MOTOR_POWER_ENABLE
AUTO_MODE_ENABLE
SDA
SCL
STATUS
USB_N
USB_P
SWDIO
SWCLK
WARNING_LIGHTS
MOTOR_POWER_SWITCH
AUTO_MODE_SWITCH
LEDSTRIP_FRONT
LEDSTRIP_BACK
SW2
SW_DIP_x01
R39
10k
JP7
D19
YELLOW
R41
510
STLINK
J14
STLINK
Battery Voltage Converter
VCC
R32
33k
R33
2k
D12
3.3V
C17
10uF
VCC: 30-60V
BATTERY_VOLTAGE: 1.714V-3.429V
STATUS LED
D13
GREEN
R37
510
I2C
R42
4.7k
R43
4.7k
D15
J15
Motor Power Enable Logic
R40
10k
C25
100nF
JP6
MOTOR_POWER_ENABLE
D16
YELLOW
R44
510
U12
SN74LVC1G11
TODO: comments
Emergency Stop Logic
U9
SN74LVC1G11
EMERGENCY_STOP_FRONT
EMERGENCY_STOP_BACK
EMERGENCY_STOP_SOFT
C19
100nF
EMERGENCY_STOP
D14
YELLOW
R38
510
TODO:
- Explain JP6, JP7, SW2, D13, D16, D14, D19, R35
Reset Logic
C20
100nF
RESET_SWITCH
RESET_SOFT
RST
RESET
U11
SN74LVC1G32
TODO: comments
Reset Switch (Only STM32)
R35
10k
SW1
435431019840
C18
100nF
Q4
NMOS
Evolutek<<
Sheet: Logic
File: logic.kicad_sch
Title: Cart'O Lutek Mainboard
Size: A4
Date: 2025-12-31
Rev: V1.0
KiCad E.D.A. 9.0.6
Id: 3/4