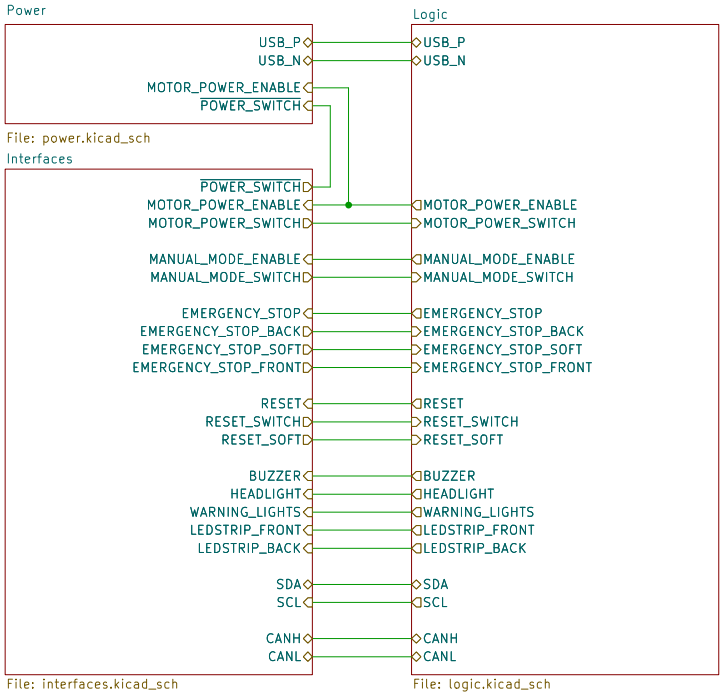

Evolutek<<

Sheet: Root
File: Mainboard.kicad_sch

Title: Cart'O Lutek Mainboard

Size: A4	Date: 2025-12-06	**Rev: V1.0**
KiCad E.D.A. 9.0.6		Id: 1/4

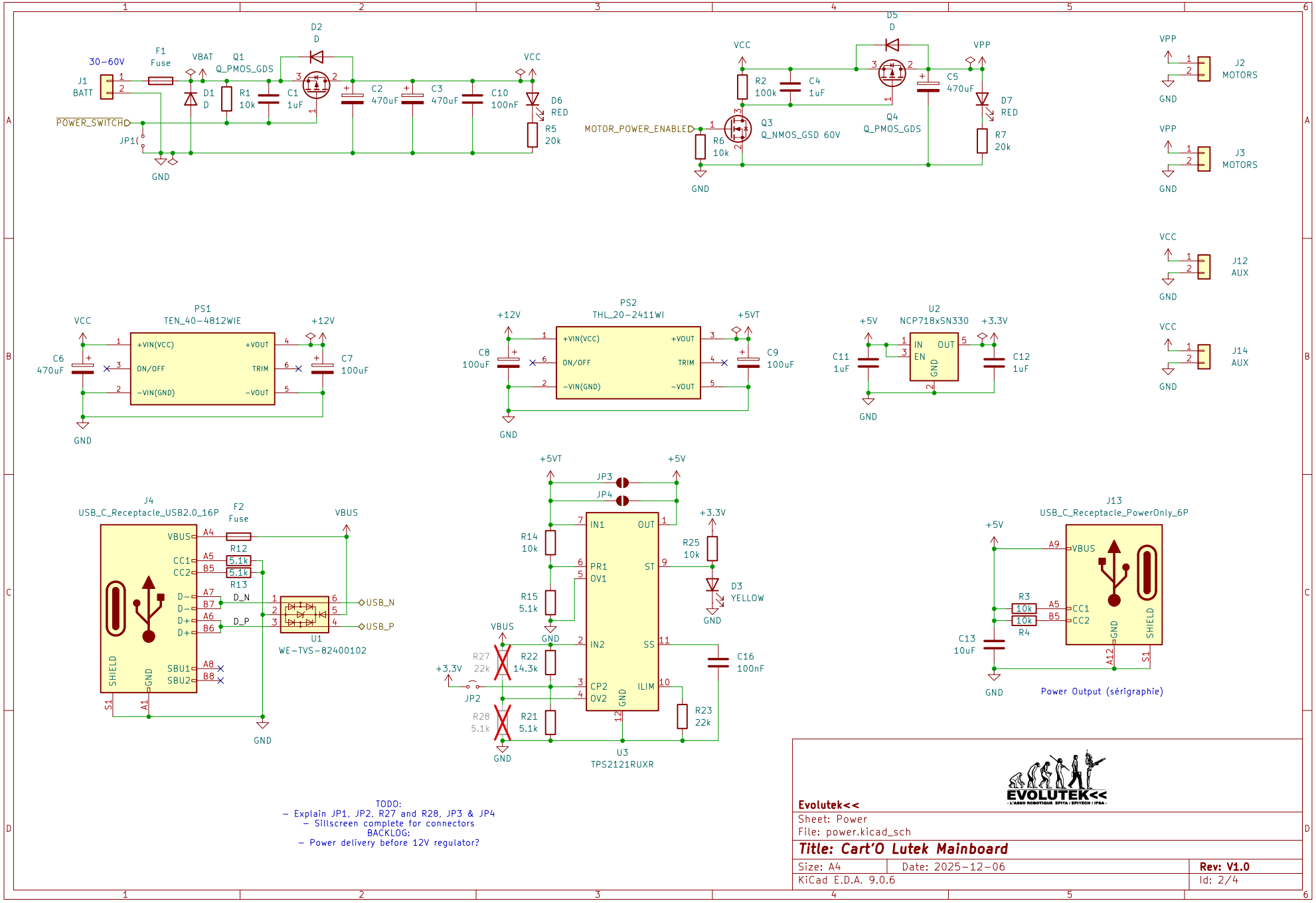

TODO:
- Explain JP1, JP2, R27 and R28, JP3 & JP4
- Sillscreen complete for connectors

BACKLOG:
- Power delivery before 12V regulator?

Evolutek<<

Sheet: Power
File: power.kicad_sch

Title: Cart'O Lutek Mainboard

Size: A4	Date: 2025-12-06	**Rev: V1.0**
KiCad E.D.A. 9.0.6		Id: 2/4

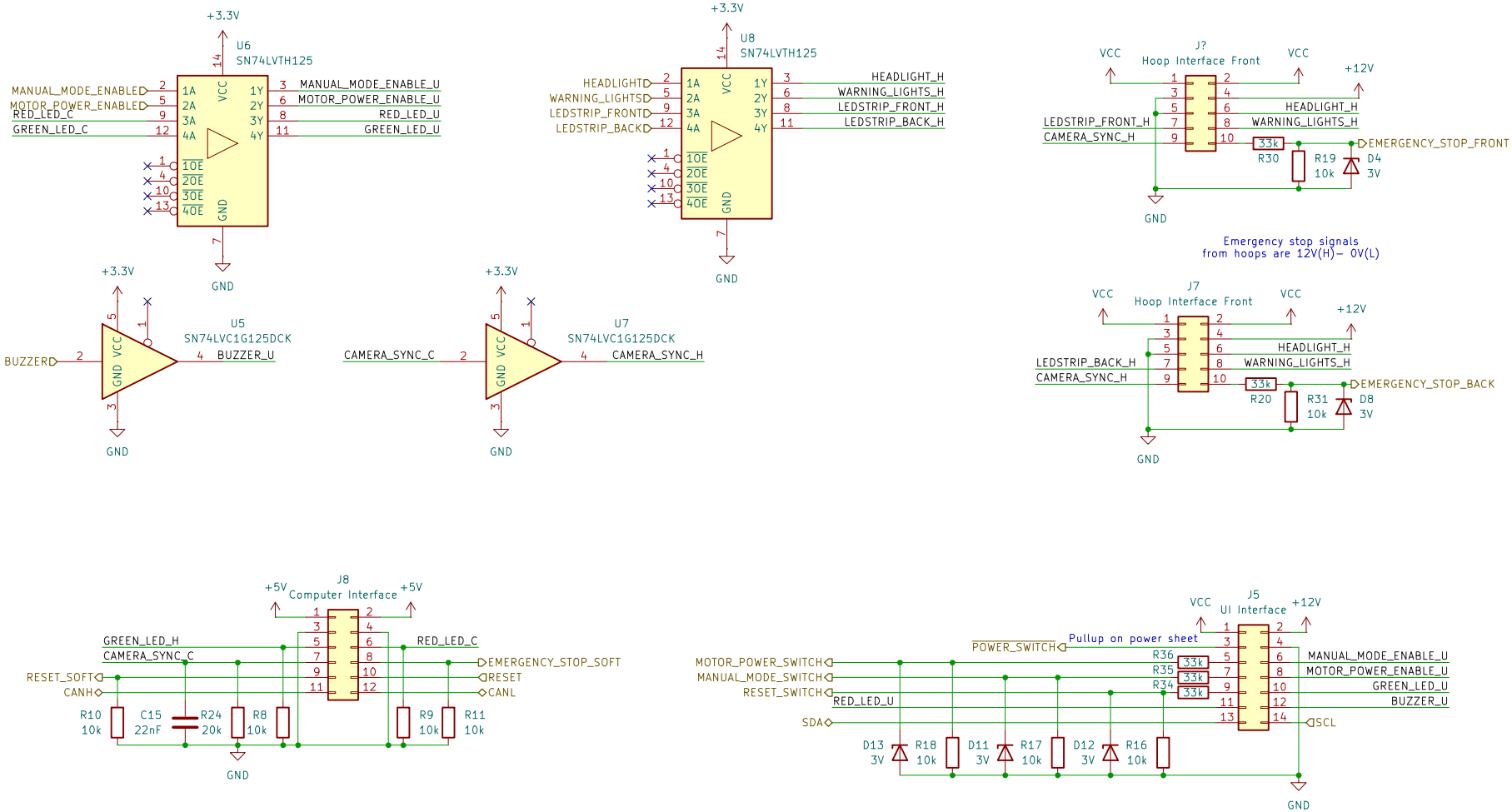

Evolutek<<

Sheet: Interfaces

File: interfaces.kicad_sch

Title: Cart'O Lutek Mainboard

Size: A4	Date: 2025-12-06	Rev: V1.0
KiCad E.D.A. 9.0.6		Id: 2/4

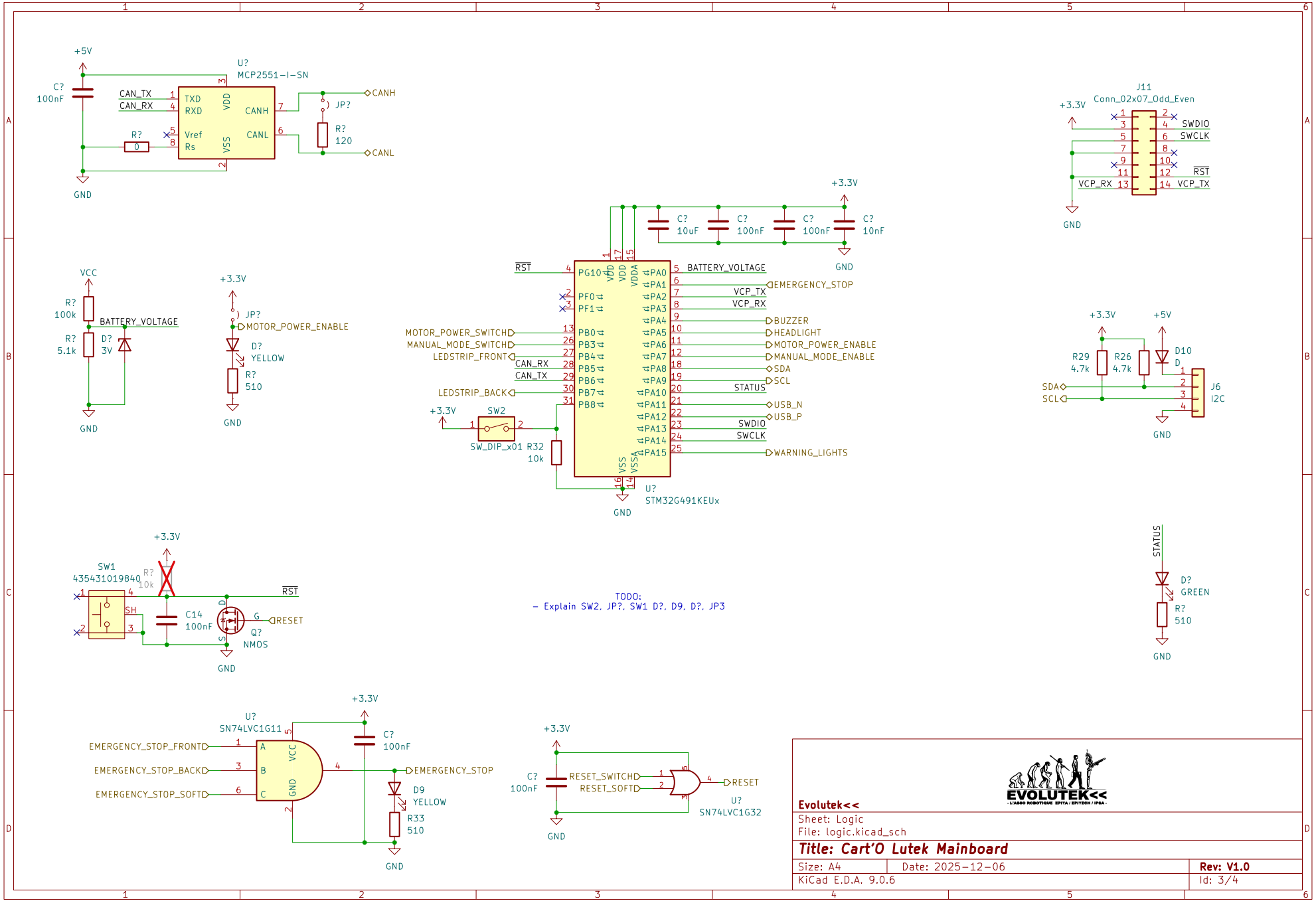
+5V
C?
100nF
U?
MCP2551-I-SN
CAN_TX
CAN_RX
TXD
RXD
VDD
CANH
Vref
Rs
VSS
CANL
R?
0
JP?
R?
120
CANH
CANL
GND
J11
Conn_02x07_Odd_Even
+3.3V
SWDIO
SWCLK
RST
VCP_RX
VCP_TX
VCC
R?
100k
R?
5.1k
BATTERY_VOLTAGE
D?
3V
JP?
MOTOR_POWER_ENABLE
D?
YELLOW
R?
510
C?
10uF
C?
100nF
C?
100nF
C?
10nF
PG10
PF0
PF1
PB0
PB3
PB4
PB5
PB6
PB7
PB8
PA0
PA1
PA2
PA3
PA4
PA5
PA6
PA7
PA8
PA9
PA10
PA11
PA12
PA13
PA14
PA15
VDD
VDDA
VSS
VSSA
MOTOR_POWER_SWITCH
MANUAL_MODE_SWITCH
LEDSTRIP_FRONT
LEDSTRIP_BACK
EMERGENCY_STOP
BUZZER
HEADLIGHT
MOTOR_POWER_ENABLE
MANUAL_MODE_ENABLE
SDA
SCL
STATUS
USB_N
USB_P
SWDIO
SWCLK
WARNING_LIGHTS
SW2
SW_DIP_x01
R32
10k
U?
STM32G491KEUx
R29
4.7k
R26
4.7k
D10
D
J6
I2C
SW1
435431019840
R?
10k
SH
C14
100nF
Q?
NMOS
RESET
STATUS
D?
GREEN
R?
510
TODO:
- Explain SW2, JP?, SW1 D?, D9, D?, JP3
U?
SN74LVC1G11
EMERGENCY_STOP_FRONT
EMERGENCY_STOP_BACK
EMERGENCY_STOP_SOFT
A
B
C
VCC
GND
C?
100nF
EMERGENCY_STOP
D9
YELLOW
R33
510
RESET_SWITCH
RESET_SOFT
RESET
U?
SN74LVC1G32
Evolutek<<
Sheet: Logic
File: logic.kicad_sch
Title: Cart'O Lutek Mainboard
Size: A4
Date: 2025-12-06
Rev: V1.0
KiCad E.D.A. 9.0.6
Id: 3/4