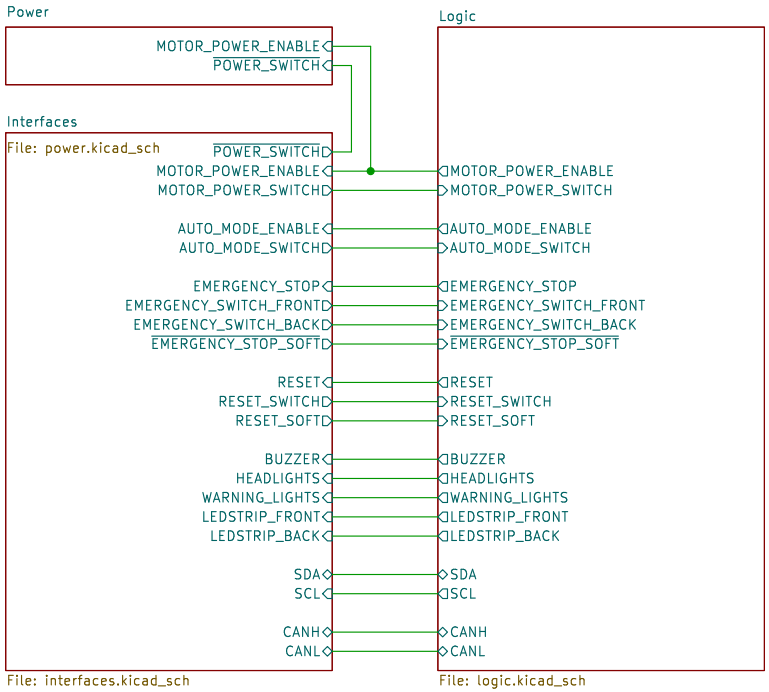


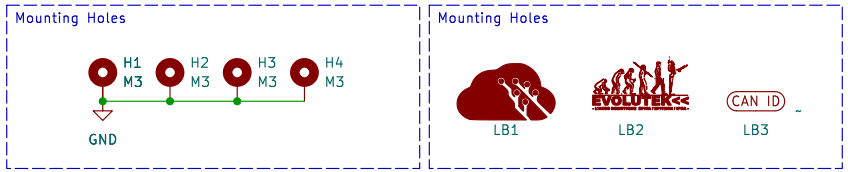


| | | |
|---|---|---|
| Evolutek<< | | |
| Sheet: Root | | |
| File: Mainboard.kicad_sch | | |
| **Title: Cart'O Lutek Mainboard** | | |
| Size: A4 | Date: 2026-01-06 | Rev: V1.0 |
| KiCad E.D.A. 9.0.6 | | Id: 1/4 |

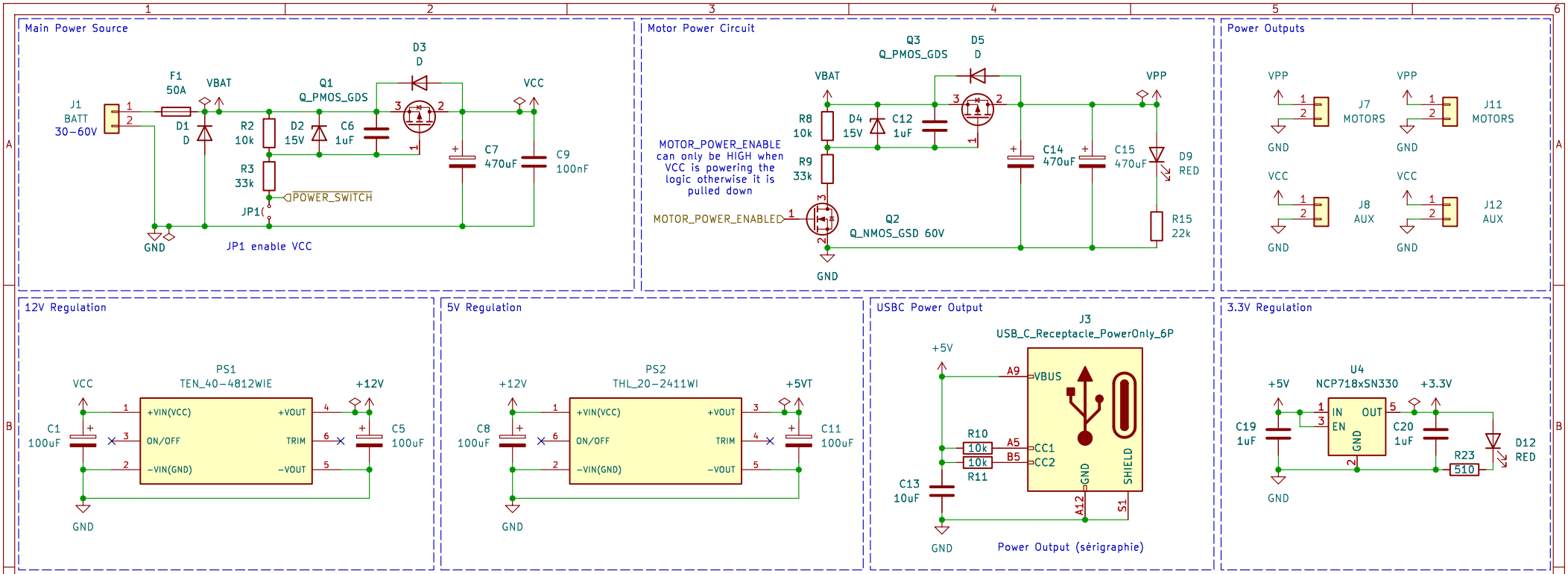
Main Power Source
J1
BATT
30-60V
F1
50A
VBAT
D1
D
R2
10k
R3
33k
D2
15V
C6
1uF
Q1
Q_PMOS_GDS
D3
D
VCC
C7
470uF
C9
100nF
POWER_SWITCH
JP1
GND
JP1 enable VCC
Motor Power Circuit
MOTOR_POWER_ENABLE can only be HIGH when VCC is powering the logic otherwise it is pulled down
MOTOR_POWER_ENABLED
R8
10k
R9
33k
D4
15V
C12
1uF
Q3
Q_PMOS_GDS
D5
D
VPP
C14
470uF
C15
470uF
D9
RED
R15
22k
Q2
Q_NMOS_GSD 60V
GND
Power Outputs
VPP
GND
VCC
J7
MOTORS
J11
MOTORS
J8
AUX
J12
AUX
12V Regulation
PS1
TEN_40-4812WIE
VCC
+12V
C1
100uF
C5
100uF
+VIN(VCC)
ON/OFF
-VIN(GND)
+VOUT
TRIM
-VOUT
GND
5V Regulation
PS2
THL_20-2411WI
+12V
+5VT
C8
100uF
C11
100uF
USBC Power Output
J3
USB_C_Receptacle_PowerOnly_6P
+5V
A9
VBUS
R10
10k
R11
10k
A5
B5
CC1
CC2
C13
10uF
GND
SHIELD
A12
S1
Power Output (sérigraphie)
3.3V Regulation
U4
NCP718xSN330
+5V
+3.3V
IN
EN
OUT
GND
C19
1uF
C20
1uF
R23
510
D12
RED
TODO:
- Sillscreen complete for connectors
BACKLOG:
- Power delivery from USBC input to get 12V ?
- Current / Voltage sensors for VCC / VPP ?
Evolutek<<
Sheet: Power
File: power.kicad_sch
Title: Cart'O Lutek Mainboard
Size: A4
Date: 2026-01-06
Rev: V1.0
KiCad E.D.A. 9.0.6
Id: 2/4

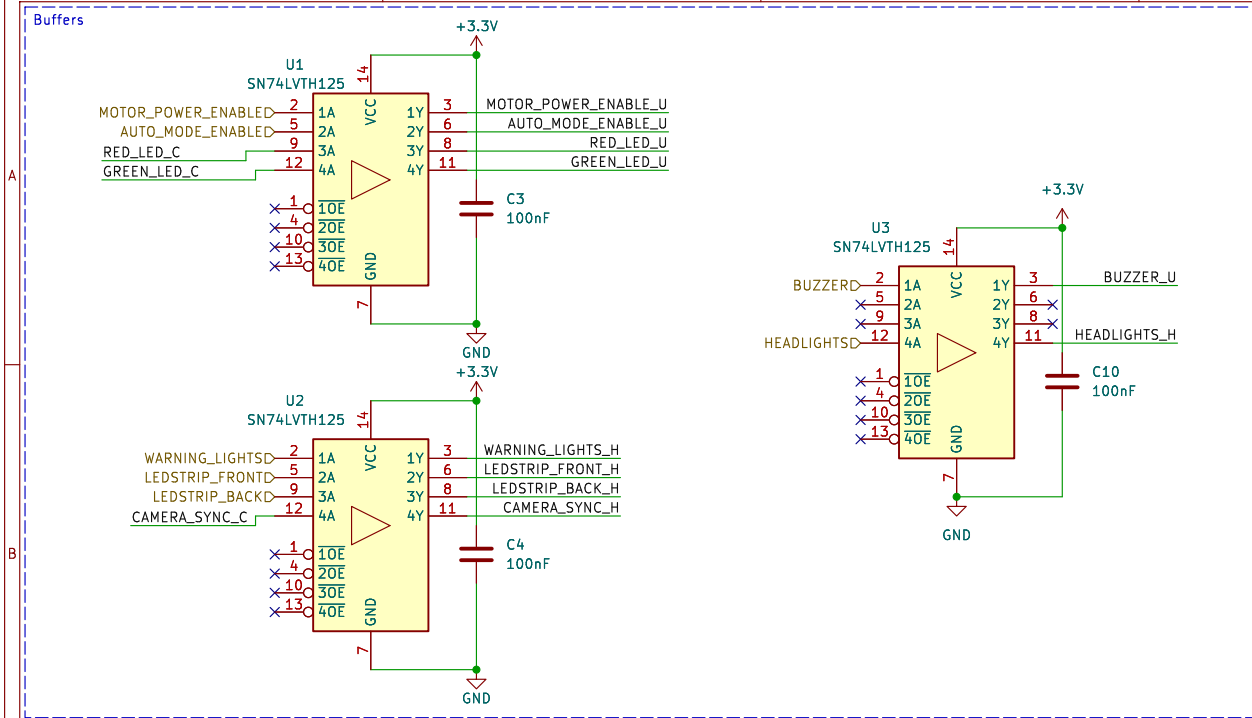


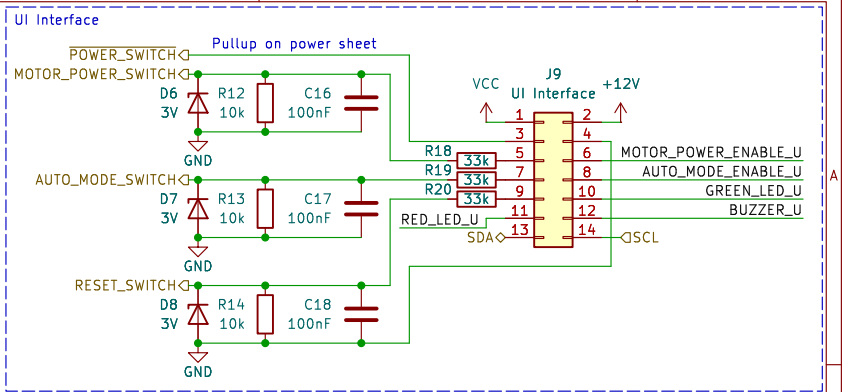


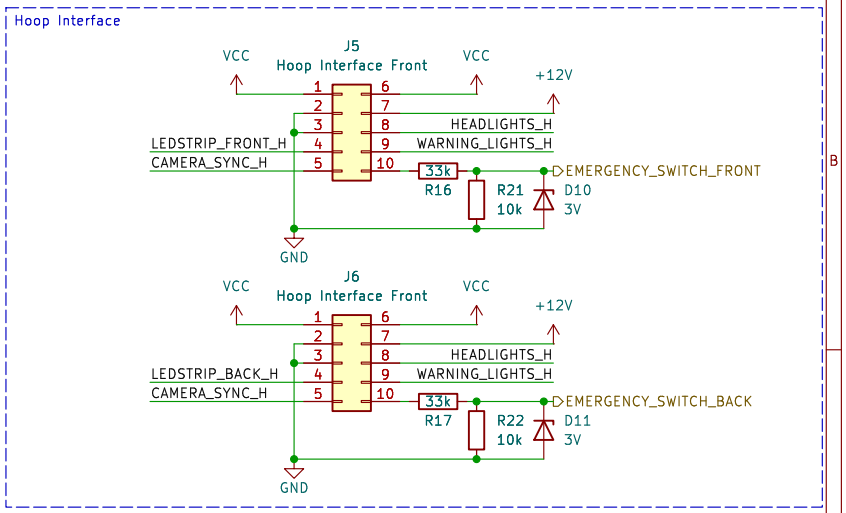


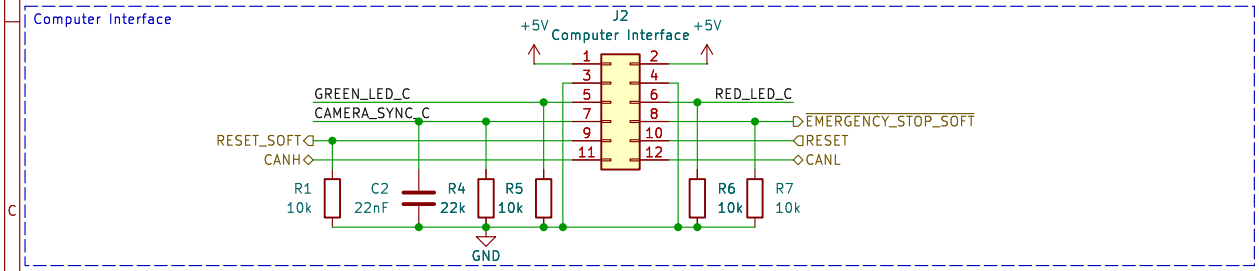


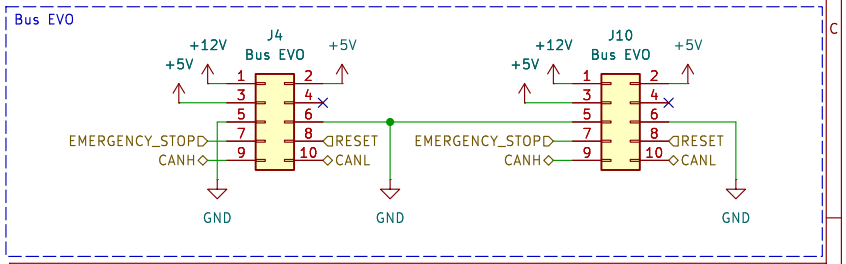


## Signals documentation

| UI Interface | | | |
|---|---|---|---|
| Signal | Range | Active Level | Direction |
| POWER_SWITCH | 0–12V | 0V (LOW) | IN |
| MOTOR_POWER_SWITCH | 0–3V | 3V (HIGH) | IN |
| MOTOR_POWER_ENABLE | 0–3.3V | 3.3V (HIGH) | OUT |
| AUTO_MODE_SWITCH | 0–3V | 3V (HIGH) | IN |
| AUTO_MODE_ENABLE | 0–3.3V | 3.3V (HIGH) | OUT |
| RESET | 0–3V | 3V (HIGH) | IN |
| GREEN_LED | 0–3.3V | 3.3V (HIGH) | OUT |
| RED_LED | 0–3.3V | 3.3V (HIGH) | OUT |
| SDA | 0–3.3V | N/A | BI |
| SCL | 0–3.3V | N/A | OUT |

| Bus EVO | | | |
|---|---|---|---|
| Signal | Range | Active Level | Direction |
| EMERGENCY_STOP | 0–3.3V | 3.3V (HIGH) | OUT |
| RESET | 0–3.3V | 3.3V (HIGH) | OUT |
| CANH | 0–5V | N/A | BI |
| CANL | 0–5V | N/A | BI |

| HOOP INTERFACE | | | |
|---|---|---|---|
| Signal | Range | Active Level | Direction |
| HEADLIGHS | 0–3.3V | 3.3V (HIGH) | OUT |
| LEDSTRIP_FRONT/BACK | 0–3.3V | 3.3V (HIGH) | OUT |
| WARNING_LIGHTS | 0–3.3V | 3.3V (HIGH) | OUT |
| EMERGENCY_SWITCH_FRONT/BACK | 0–3V | 3V (HIGH) | IN |

| Computer Interface | | | |
|---|---|---|---|
| Signal | Range | Active Level | Direction |
| GREEN_LED | 0–3.3V | 3.3V (HIGH) | IN |
| RED_LED | 0–3.3V | 3.3V (HIGH) | IN |
| CAMERA_SYNC | 0–3.3V | 3.3V (HIGH) | IN |
| EMERGENCY_STOP_SOFT | 0–3.3V | 0V (LOW) | IN |
| CANH | 0–5V | N/A | BI |
| CANL | 0–5V | N/A | BI |

**Evolutek<<**

Sheet: Interfaces
File: interfaces.kicad_sch

**Title: Cart'O Lutek Mainboard**

| | | |
|---|---|---|
| Size: A4 | Date: 2026-01-06 | Rev: V1.0 |
| KiCad E.D.A. 9.0.6 | | Id: 2/4 |

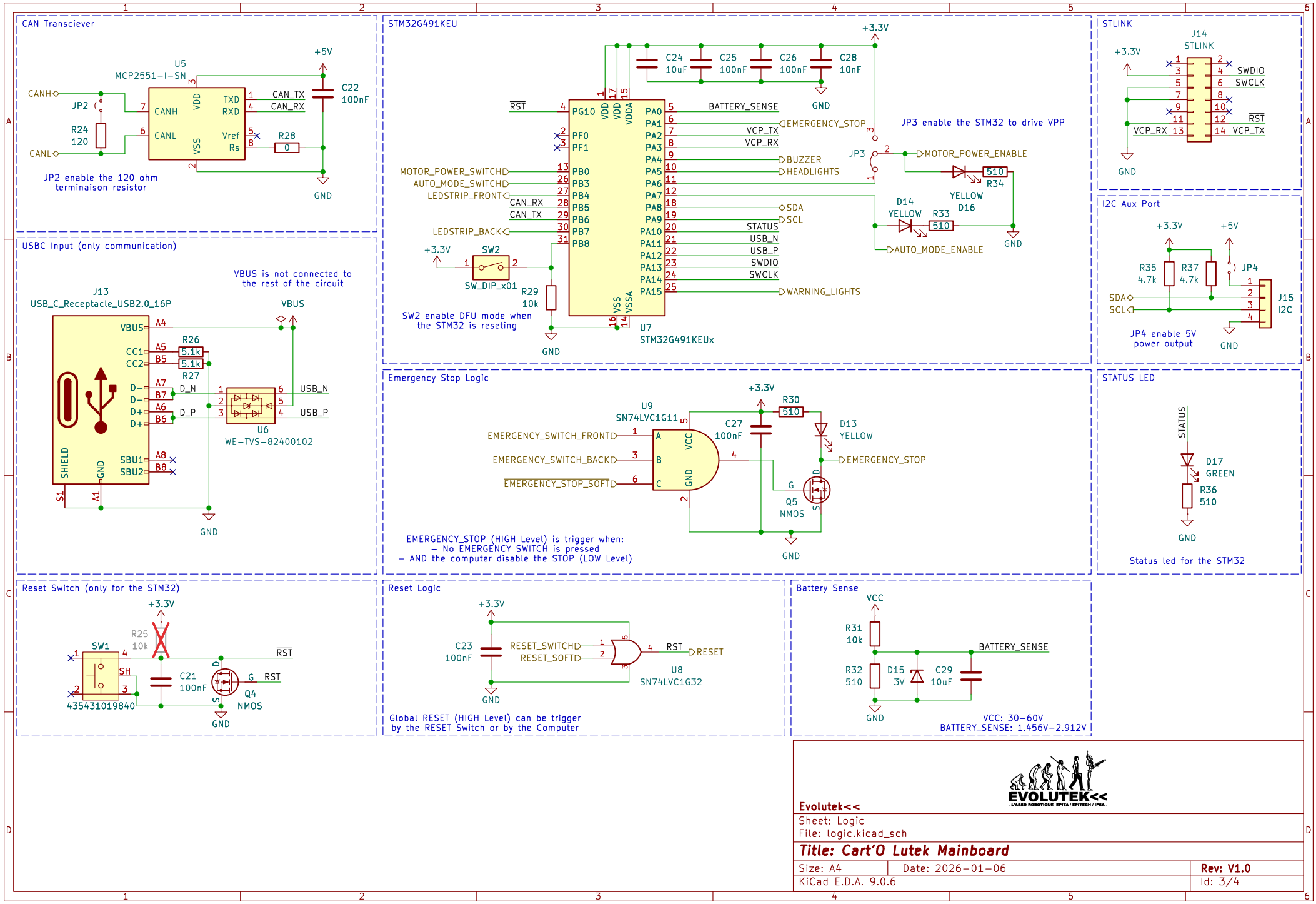
CAN Transciever
U5
MCP2551-I-SN
CANH
CANL
JP2
R24
120
CAN_TX
CAN_RX
R28
0
C22
100nF
+5V
GND
JP2 enable the 120 ohm terminaison resistor
STM32G491KEU
U7
STM32G491KEUx
C24
10uF
C25
100nF
C26
100nF
C28
10nF
+3.3V
BATTERY_SENSE
EMERGENCY_STOP
VCP_TX
VCP_RX
BUZZER
HEADLIGHTS
SDA
SCL
STATUS
USB_N
USB_P
SWDIO
SWCLK
WARNING_LIGHTS
MOTOR_POWER_SWITCH
AUTO_MODE_SWITCH
LEDSTRIP_FRONT
LEDSTRIP_BACK
SW2
SW_DIP_x01
R29
10k
SW2 enable DFU mode when the STM32 is reseting
JP3 enable the STM32 to drive VPP
JP3
MOTOR_POWER_ENABLE
AUTO_MODE_ENABLE
D14
YELLOW
R33
510
D16
YELLOW
R34
510
STLINK
J14
STLINK
SWDIO
SWCLK
RST
VCP_RX
VCP_TX
I2C Aux Port
R35
4.7k
R37
4.7k
JP4
J15
I2C
JP4 enable 5V power output
USBC Input (only communication)
J13
USB_C_Receptacle_USB2.0_16P
VBUS
VBUS is not connected to the rest of the circuit
R26
5.1k
R27
D_N
D_P
U6
WE-TVS-82400102
SHIELD
Emergency Stop Logic
U9
SN74LVC1G11
EMERGENCY_SWITCH_FRONT
EMERGENCY_SWITCH_BACK
EMERGENCY_STOP_SOFT
C27
100nF
R30
510
D13
YELLOW
Q5
NMOS
EMERGENCY_STOP (HIGH Level) is trigger when:
- No EMERGENCY SWITCH is pressed
- AND the computer disable the STOP (LOW Level)
STATUS LED
D17
GREEN
R36
510
Status led for the STM32
Reset Switch (only for the STM32)
SW1
435431019840
R25
10k
C21
100nF
Q4
NMOS
Reset Logic
C23
100nF
RESET_SWITCH
RESET_SOFT
RESET
U8
SN74LVC1G32
Global RESET (HIGH Level) can be trigger by the RESET Switch or by the Computer
Battery Sense
VCC
R31
10k
R32
510
D15
3V
C29
10uF
BATTERY_SENSE
VCC: 30-60V
BATTERY_SENSE: 1.456V-2.912V
EVOLUTEK<<
Evolutek<<
Sheet: Logic
File: logic.kicad_sch
Title: Cart'O Lutek Mainboard
Size: A4
Date: 2026-01-06
Rev: V1.0
KiCad E.D.A. 9.0.6
Id: 3/4