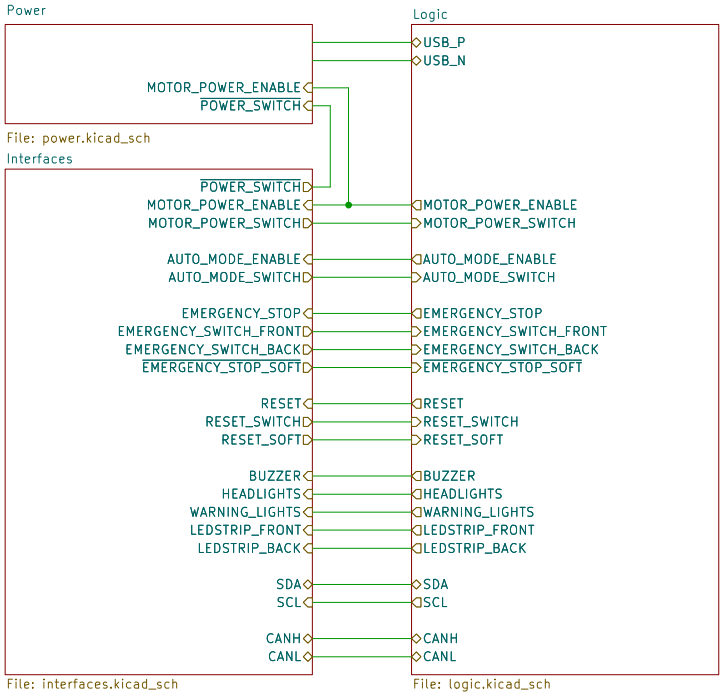

Evolutek<<

Sheet: Root
File: Mainboard.kicad_sch

Title: Cart'O Lutek Mainboard

Size: A4	Date: 2026-01-04	**Rev: V1.0**
KiCad E.D.A. 9.0.6		Id: 1/4

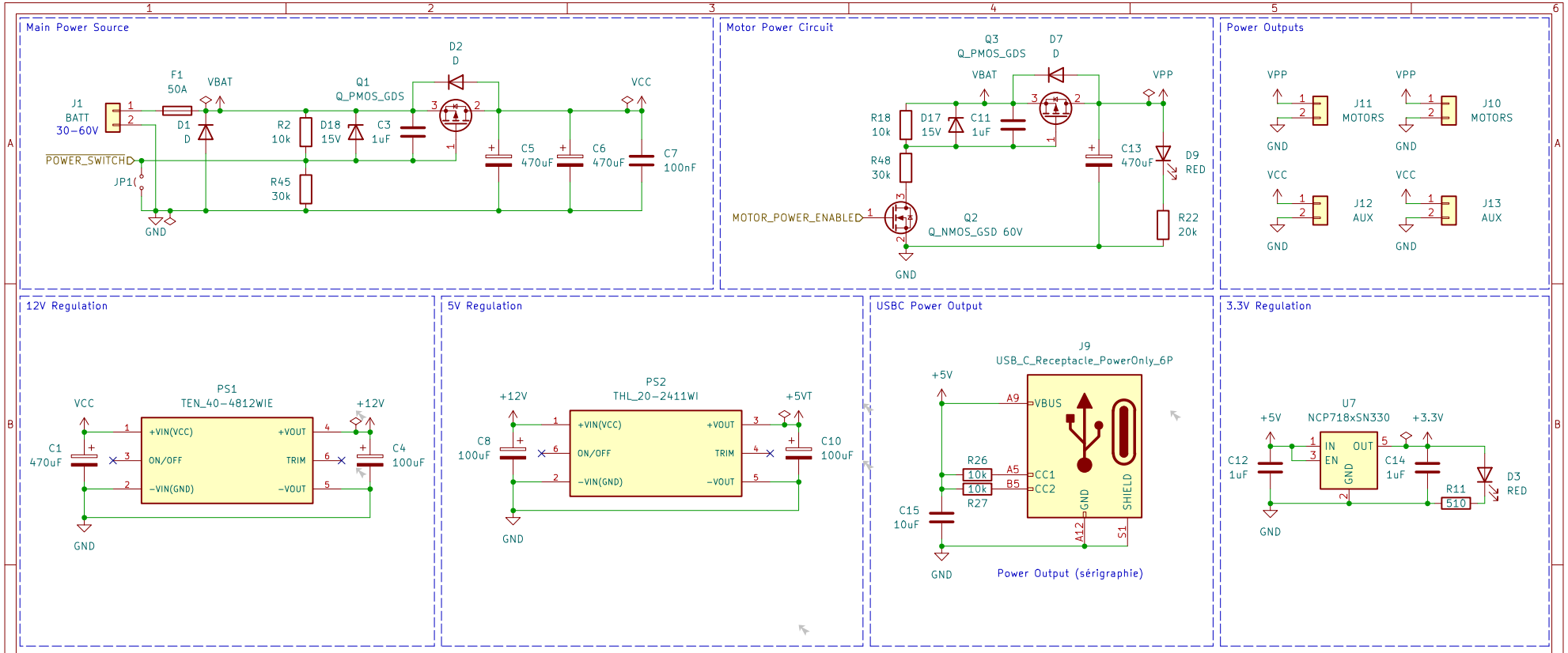

TODO:
- Sillscreen complete for connectors
BACKLOG:
- 12V Stepup from 5V ?
- Power delivery before 12V regulator?
- Current / Voltage sensors ?

Comments	
Component	Notes
JP1	Enable main power
JP2	Force 5V source selection on USBC IN port
JP3 & JP4	Bypass U6 to power the logic with inboard 5V
R9 & R10	Can be soldered to enable overvoltage protection
D4	5V source selection status, onboard selected when D4 is ON

Evolutek<<

Sheet: Power
File: power.kicad_sch

Title: Cart'O Lutek Mainboard

Size: A4	Date: 2026-01-04	**Rev: V1.0**
KiCad E.D.A. 9.0.6		Id: 2/4

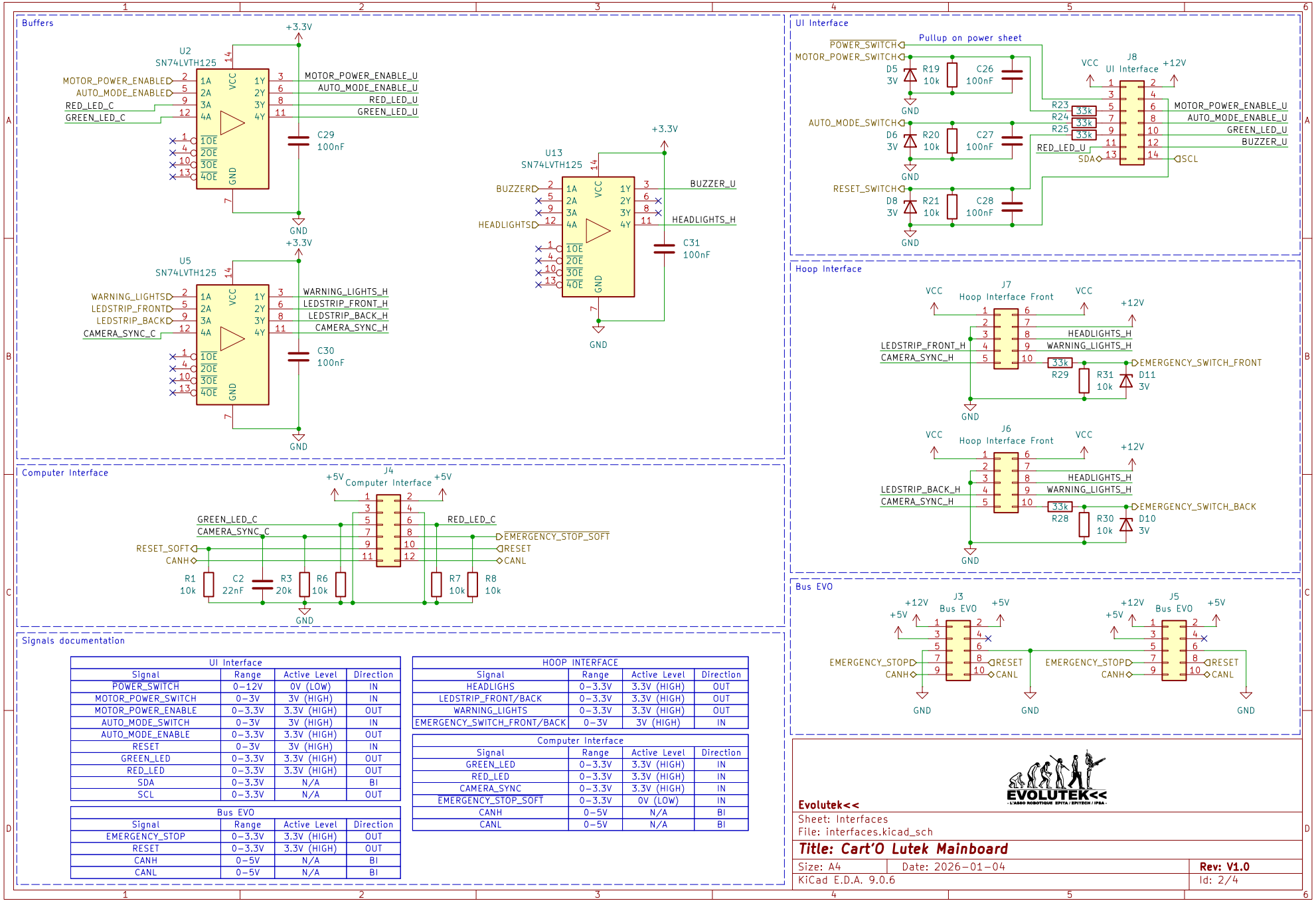

UI Interface			
Signal	Range	Active Level	Direction
POWER_SWITCH	0–12V	0V (LOW)	IN
MOTOR_POWER_SWITCH	0–3V	3V (HIGH)	IN
MOTOR_POWER_ENABLE	0–3.3V	3.3V (HIGH)	OUT
AUTO_MODE_SWITCH	0–3V	3V (HIGH)	IN
AUTO_MODE_ENABLE	0–3.3V	3.3V (HIGH)	OUT
RESET	0–3V	3V (HIGH)	IN
GREEN_LED	0–3.3V	3.3V (HIGH)	OUT
RED_LED	0–3.3V	3.3V (HIGH)	OUT
SDA	0–3.3V	N/A	BI
SCL	0–3.3V	N/A	OUT

Bus EVO			
Signal	Range	Active Level	Direction
EMERGENCY_STOP	0–3.3V	3.3V (HIGH)	OUT
RESET	0–3.3V	3.3V (HIGH)	OUT
CANH	0–5V	N/A	BI
CANL	0–5V	N/A	BI

HOOP INTERFACE			
Signal	Range	Active Level	Direction
HEADLIGHS	0–3.3V	3.3V (HIGH)	OUT
LEDSTRIP_FRONT/BACK	0–3.3V	3.3V (HIGH)	OUT
WARNING_LIGHTS	0–3.3V	3.3V (HIGH)	OUT
EMERGENCY_SWITCH_FRONT/BACK	0–3V	3V (HIGH)	IN

Computer Interface			
Signal	Range	Active Level	Direction
GREEN_LED	0–3.3V	3.3V (HIGH)	IN
RED_LED	0–3.3V	3.3V (HIGH)	IN
CAMERA_SYNC	0–3.3V	3.3V (HIGH)	IN
EMERGENCY_STOP_SOFT	0–3.3V	0V (LOW)	IN
CANH	0–5V	N/A	BI
CANL	0–5V	N/A	BI

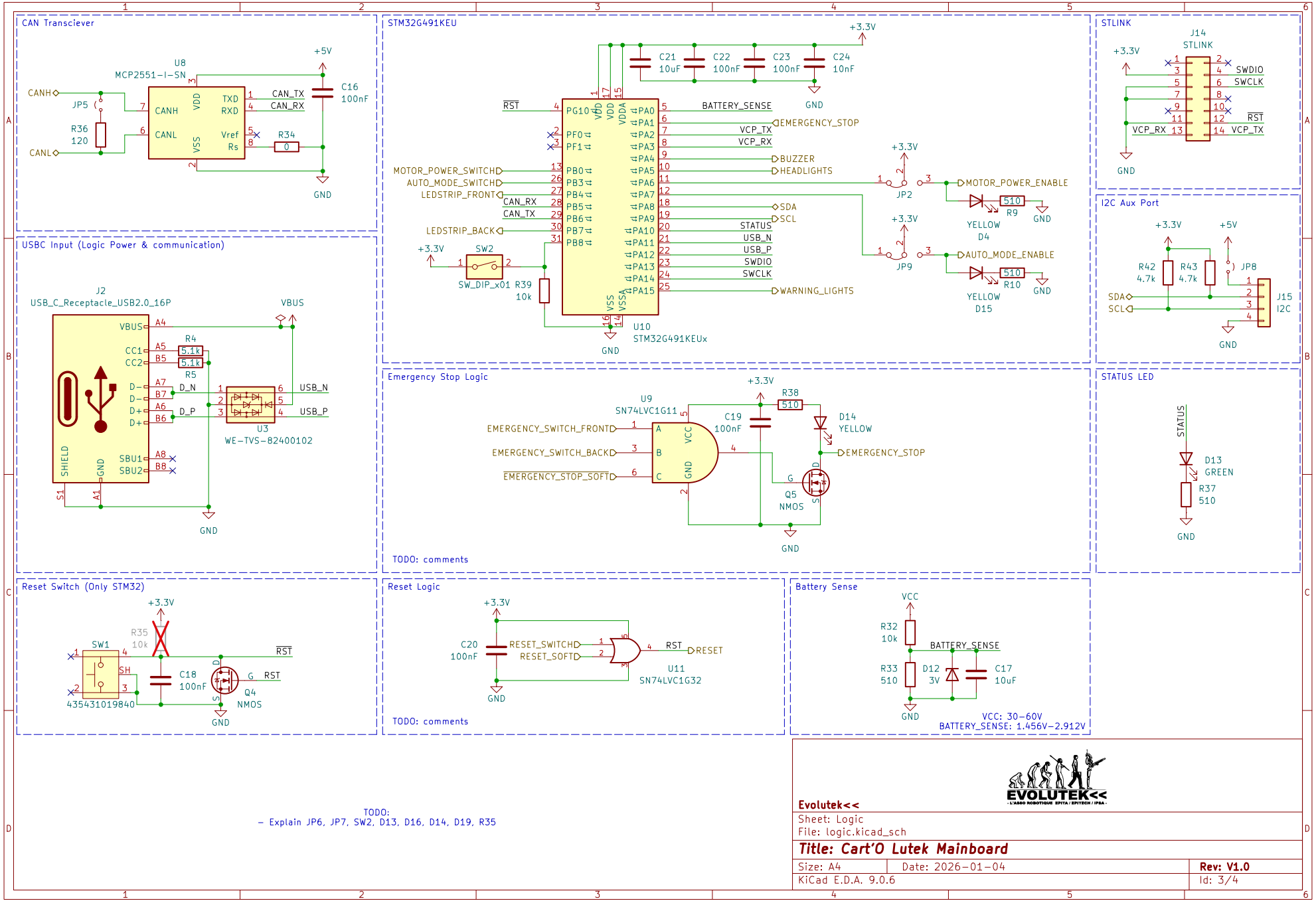
CAN Transciever
U8
MCP2551-I-SN
CANH
CANL
JP5
R36
120
CAN_TX
CAN_RX
R34
0
C16
100nF
+5V
GND
STM32G491KEU
U10
STM32G491KEUx
C21
10uF
C22
100nF
C23
100nF
C24
10nF
+3.3V
RST
BATTERY_SENSE
EMERGENCY_STOP
VCP_TX
VCP_RX
BUZZER
HEADLIGHTS
MOTOR_POWER_SWITCH
AUTO_MODE_SWITCH
LEDSTRIP_FRONT
LEDSTRIP_BACK
SDA
SCL
STATUS
USB_N
USB_P
SWDIO
SWCLK
WARNING_LIGHTS
SW2
SW_DIP_x01
R39
10k
JP2
JP9
MOTOR_POWER_ENABLE
AUTO_MODE_ENABLE
R9
R10
510
YELLOW
D4
D15
STLINK
J14
STLINK
SWDIO
SWCLK
RST
VCP_RX
VCP_TX
I2C Aux Port
+5V
R42
4.7k
R43
4.7k
JP8
J15
I2C
USBC Input (Logic Power & communication)
J2
USB_C_Receptacle_USB2.0_16P
VBUS
CC1
CC2
R4
R5
5.1k
D-
D+
D_N
D_P
U3
WE-TVS-82400102
USB_N
USB_P
SBU1
SBU2
SHIELD
GND
S1
A1
Emergency Stop Logic
U9
SN74LVC1G11
EMERGENCY_SWITCH_FRONT
EMERGENCY_SWITCH_BACK
EMERGENCY_STOP_SOFT
C19
100nF
R38
510
D14
YELLOW
EMERGENCY_STOP
Q5
NMOS
TODO: comments
STATUS LED
STATUS
D13
GREEN
R37
510
Reset Switch (Only STM32)
SW1
435431019840
R35
10k
C18
100nF
Q4
NMOS
Reset Logic
C20
100nF
RESET_SWITCH
RESET_SOFT
RESET
U11
SN74LVC1G32
TODO: comments
Battery Sense
VCC
R32
10k
R33
510
D12
3V
C17
10uF
VCC: 30-60V
BATTERY_SENSE: 1.456V-2.912V
TODO:
- Explain JP6, JP7, SW2, D13, D16, D14, D19, R35
Evolutek<<
Sheet: Logic
File: logic.kicad_sch
Title: Cart'O Lutek Mainboard
Size: A4
Date: 2026-01-04
Rev: V1.0
KiCad E.D.A. 9.0.6
Id: 3/4