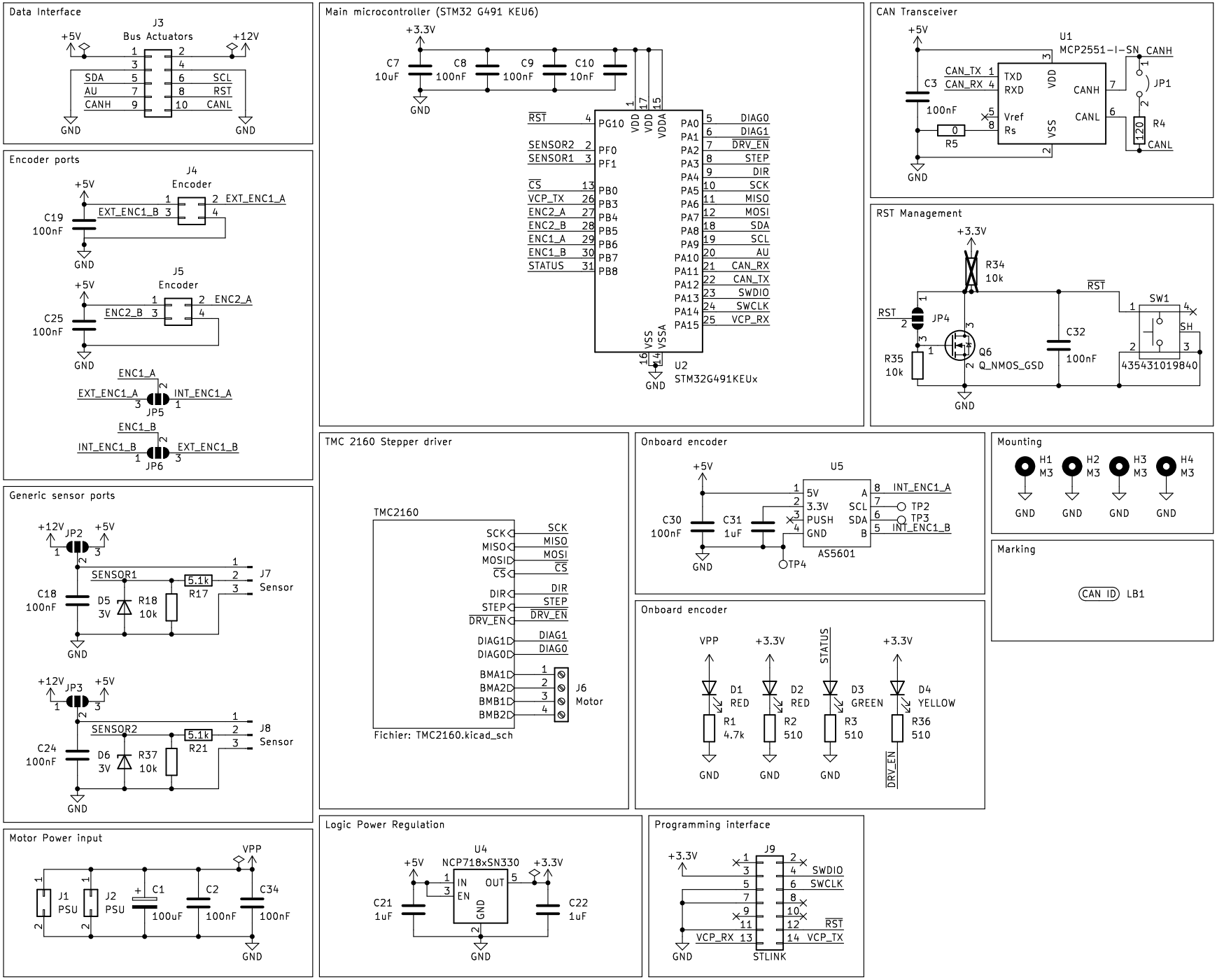
Data Interface
J3
Bus Actuators
+5V
+12V
SDA
AU
CANH
SCL
RST
CANL
GND
Encoder ports
J4
Encoder
EXT_ENC1_A
EXT_ENC1_B
C19
100nF
J5
Encoder
ENC2_A
ENC2_B
C25
100nF
ENC1_A
EXT_ENC1_A
INT_ENC1_A
JP5
ENC1_B
INT_ENC1_B
EXT_ENC1_B
JP6
Generic sensor ports
JP2
SENSOR1
5.1k
R17
J7
Sensor
C18
100nF
D5
3V
R18
10k
JP3
SENSOR2
R21
J8
Sensor
C24
100nF
D6
3V
R37
10k
Motor Power input
VPP
J1
PSU
J2
PSU
C1
100uF
C2
100nF
C34
100nF
Main microcontroller (STM32 G491 KEU6)
+3.3V
C7
10uF
C8
100nF
C9
100nF
C10
10nF
RST
SENSOR2
SENSOR1
CS
VCP_TX
ENC2_A
ENC2_B
ENC1_A
ENC1_B
STATUS
PG10
PF0
PF1
PB0
PB3
PB4
PB5
PB6
PB7
PB8
VDD
VDDA
VSS
VSSA
PA0
PA1
PA2
PA3
PA4
PA5
PA6
PA7
PA8
PA9
PA10
PA11
PA12
PA13
PA14
PA15
DIAG0
DIAG1
DRV_EN
STEP
DIR
SCK
MISO
MOSI
SDA
SCL
AU
CAN_RX
CAN_TX
SWDIO
SWCLK
VCP_RX
U2
STM32G491KEUx
TMC 2160 Stepper driver
TMC2160
SCK
MISO
MOSI
CS
DIR
STEP
DRV_EN
DIAG1
DIAG0
BMA1
BMA2
BMB1
BMB2
J6
Motor
Fichier: TMC2160.kicad_sch
Logic Power Regulation
U4
NCP718xSN330
+5V
+3.3V
IN
OUT
EN
GND
C21
1uF
C22
1uF
Programming interface
J9
STLINK
SWDIO
SWCLK
RST
VCP_RX
VCP_TX
CAN Transceiver
U1
MCP2551-I-SN
CAN_TX
CAN_RX
TXD
RXD
Vref
Rs
VDD
VSS
CANH
CANL
C3
100nF
R5
0
JP1
R4
120
RST Management
R34
10k
JP4
R35
10k
Q6
Q_NMOS_GSD
C32
100nF
SW1
SH
435431019840
Onboard encoder
U5
AS5601
5V
3.3V
PUSH
SCL
SDA
A
B
INT_ENC1_A
INT_ENC1_B
TP2
TP3
TP4
C30
100nF
C31
1uF
Onboard encoder
VPP
STATUS
D1
RED
R1
4.7k
D2
RED
R2
510
D3
GREEN
R3
510
D4
YELLOW
R36
510
Mounting
H1
M3
H2
M3
H3
M3
H4
M3
Marking
CAN ID
LB1

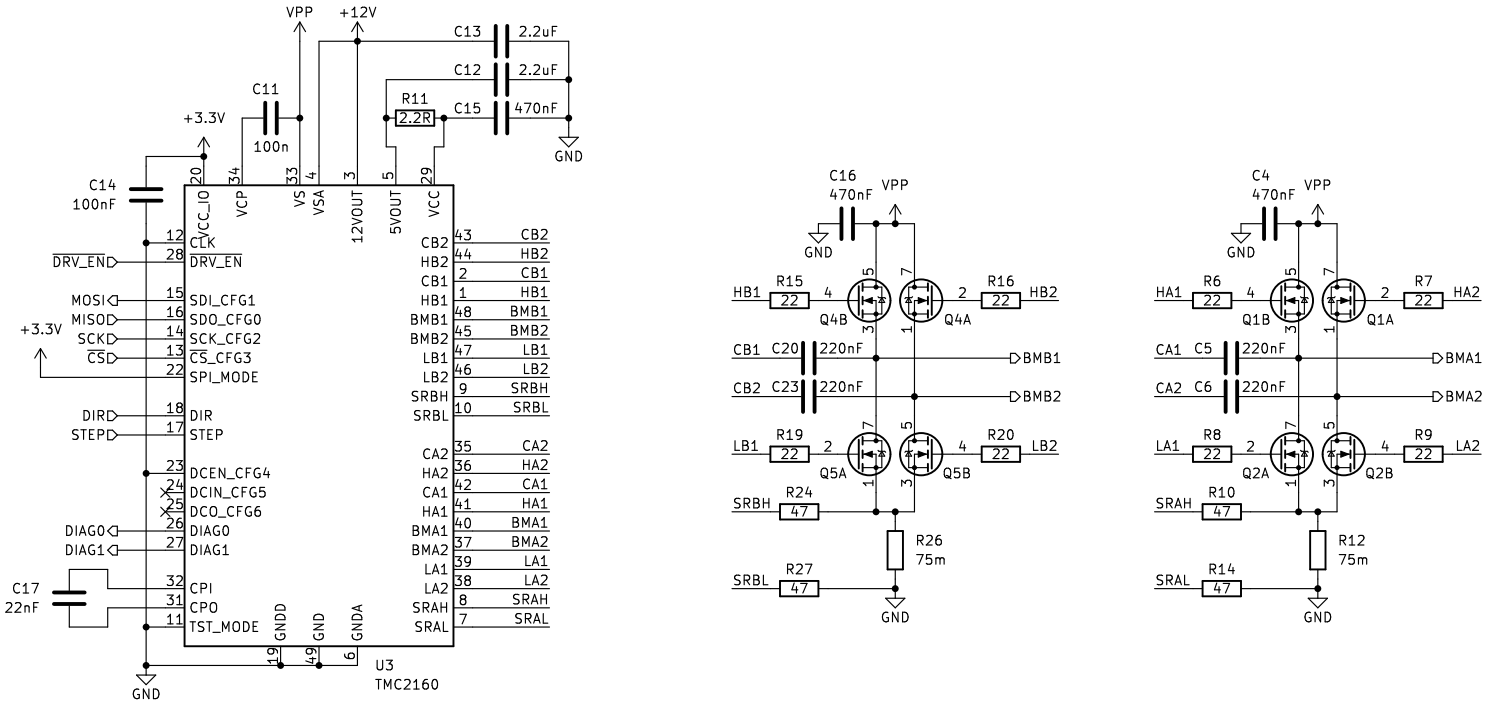
VPP
+12V
C13 2.2uF
C12 2.2uF
C11 100n
R11 2.2R
C15 470nF
GND
+3.3V
C14 100nF
VCC_IO
VCP
VS
VSA
12VOUT
5VOUT
VCC
CLK
DRV_EN
SDI_CFG1
SDO_CFG0
SCK_CFG2
CS_CFG3
SPI_MODE
DIR
STEP
DCEN_CFG4
DCIN_CFG5
DCO_CFG6
DIAG0
DIAG1
CPI
CPO
TST_MODE
GNDD
GND
GNDA
CB2
HB2
CB1
HB1
BMB1
BMB2
LB1
LB2
SRBH
SRBL
CA2
HA2
CA1
HA1
BMA1
BMA2
LA1
LA2
SRAH
SRAL
MOSI
MISO
SCK
CS
C17 22nF
U3
TMC2160
C16 470nF
R15 22
R16 22
Q4B
Q4A
C20 220nF
C23 220nF
BMB1
BMB2
R19 22
R20 22
Q5A
Q5B
R24 47
R27 47
R26 75m
C4 470nF
R6 22
R7 22
Q1B
Q1A
C5 220nF
C6 220nF
BMA1
BMA2
R8 22
R9 22
Q2A
Q2B
R10 47
R14 47
R12 75m