Convolution and Convolutional Neural Networks

COMP 4630 | Winter 2026

Charlotte Curtis

Overview

- **Convolutional neural networks** (CNNs) are a type of neural network that is particularly well-suited to image data
- Before we can understand CNNs, we need to understand **convolution**
- References and suggested reading:
  - Scikit-learn book: Chapter 14
  - Deep Learning Book: Chapter 9
  - 3blue1brown video: What is convolution?

Convolution

- **Convolution** is defined as:

$$(f * g)(t) = \int_{-\infty}^{\infty} f(\tau)g(t-\tau)d\tau$$

- Or in the discrete case:

$$(f * g)[n] = \sum_{m=-\infty}^{\infty} f[m]g[n-m]$$

- Can be though of as "flipping" one function and sliding it over the other, multiplying and summing at each point

Example

We're in a hospital dealing with an outbreak. For the first 5 days we have 1 patient on Monday, 2 on Tuesday, etc:

$$\text{patients}(x) = [1, 2, 3, 4, 5]$$

Fortunately, we know how to treat them: 3 doses on day 1, then 2, then 1:

$$\text{doses}(x) = [3, 2, 1]$$

And after 3 days they're cured.

How many doses do we need on each day?

Hospital example taken from here

Convolution in 2D

- Extending to 2D basically adds another summation/integration:

$$(f * g)[n, m] = \sum_{i=-\infty}^{\infty} \sum_{j=-\infty}^{\infty} f[i, j] g[n - i, m - j]$$

$$(f * g)(x, y) = \int_{-\infty}^{\infty} \int_{-\infty}^{\infty} f(u, v) g(x - u, y - v) du dv$$

- This can also be extended to higher dimensions
- Caution: a **colour image** is a 3D array, not a 2D array
- For typical image processing applications, the **colour channels** are convolved **independently** such that the output is still a 3D array

Convolution kernels

- Typically there is a small **kernel** that is convolved with the input
- This is just the smaller of the two functions in the convolution
- ❓ What happens at the edges of the input?

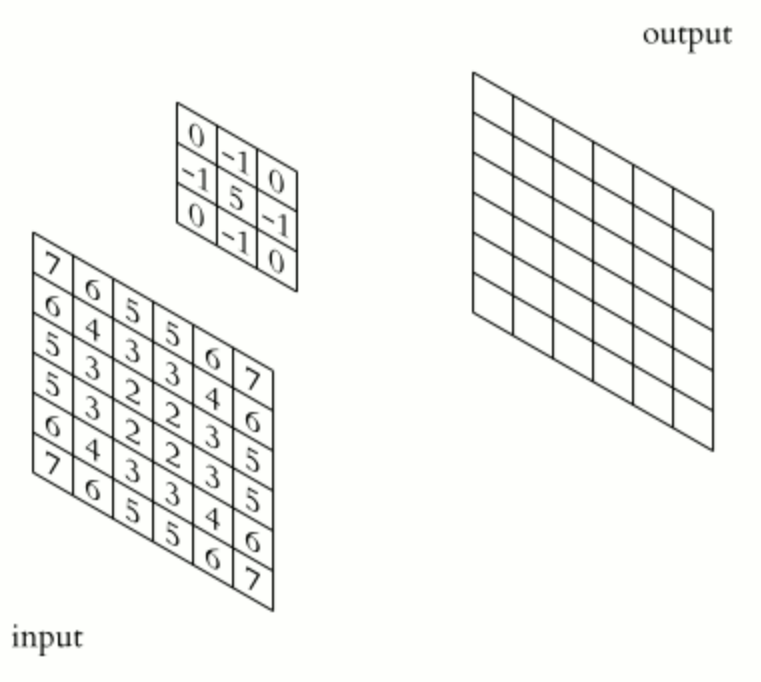

By Michael Plotke - Own work, CC BY-SA 3.0, From Wikipedia

Some common kernels

- Averaging:

$$\frac{1}{9}\begin{bmatrix} 1 & 1 & 1 \\ 1 & 1 & 1 \\ 1 & 1 & 1 \end{bmatrix}$$

- Differentiation:

$$\begin{bmatrix} -1 & 0 & 1 \\ -1 & 0 & 1 \\ -1 & 0 & 1 \end{bmatrix}$$

- Sizes are commonly chosen to be 3x3, 5x5, 7x7, etc.
- ❓ Why divide by 9?
- ❓ Why odd sizes?
- ❓ What effect do you think these kernels will have on an image?

A side tangent on frequency representation

- Any signal can be represented as a weighted summation of sinusoids
- For a discrete signal $x[n]$, you can think of this as:

$$x[n] = \sum_{k=0}^{N-1} \left[a_k \cos\left(\frac{2\pi kn}{N}\right) + b_k \sin\left(\frac{2\pi kn}{N}\right) \right]$$

- Or, using Euler's formula $e^{j\theta} = \cos\theta + j\sin\theta$:

$$x[n] = \sum_{k=0}^{N-1} c_k e^{j\frac{2\pi kn}{N}}$$

where the complex coefficients $c_k = a_k + jb_k$

j is the same as i, but in engineering

Fourier Transform

- To figure out what the coefficients c_k are, we can use the **Discrete Fourier Transform** (DFT):

$$X[k] = \sum_{n=0}^{N-1} x[n] e^{-j\frac{2\pi kn}{N}}$$

  where each element of $X[k]$ is the coefficient c_k for frequency k
- The **Fast Fourier Transform** (FFT) computes the DFT in $O(n \log n)$ time
- Convolution is $O(n^2)$

Convolution is multiplication in frequency

- Sometimes it is useful to use the **Fourier Transform** to obtain a frequency representation of an image (or signal)
- In the frequency domain, convolution is simply element-wise multiplication
- This allows for some efficient operations such as blurring/sharpening an image, as well as some fancy stuff like **deconvolution**
- Sharp edges in space become **ringing** in frequency, and vice versa
- ❓ why do CNNs operate in the spatial domain?

Convolutional neural networks

- 1958: Hubel and Wiesel experiment on cats and reveal the structure of the visual cortex
- Determine that specific neurons react to specific features and **receptive fields**
- Modelled in the "neocognitron" by Kunihiko Fukushima in 1980
- LeCun's work in the 1990s led to modern CNNs

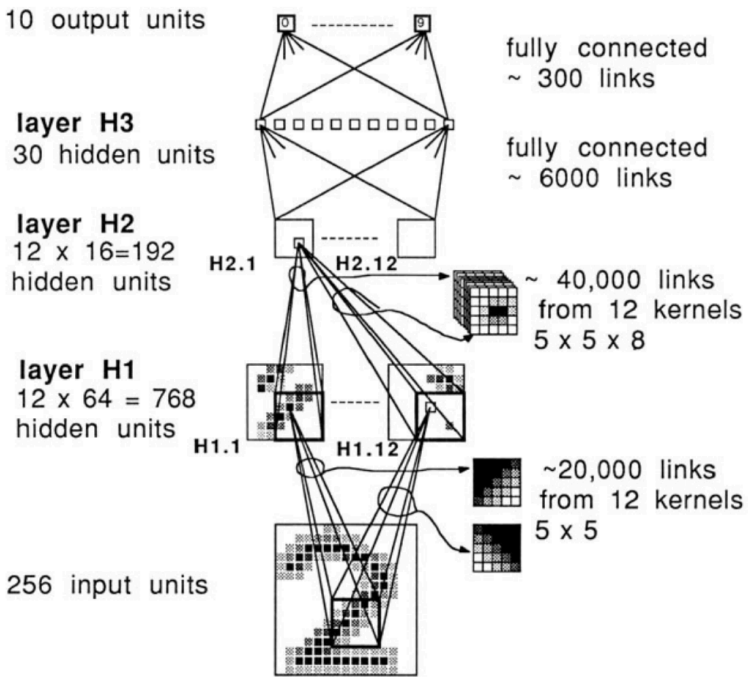

Why CNNs?

- A fully connected network has a 1:1 mapping of weights to inputs
- Fine for MNIST (28x28) pixels, but quickly grows out of control
- ❓ If you train a (fully connected) network on 100x100 images, how would you infer on 200x200 images?
- ❓ What if an object is shifted, rotated, or flipped within the image?

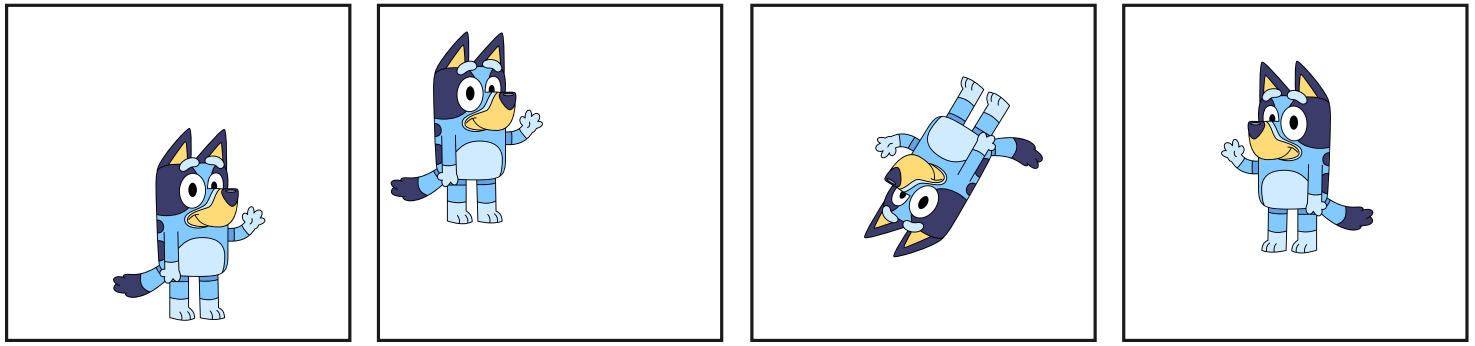

Bluey image used without permission from bluey.tv

Convolutional layers

- A **convolution layer** is a set of kernels whose weights are learned
- Instead of the straight up weighted sum of inputs, the input image is convolved with the learned kernel(s)
- The output is often referred to as a **feature map**
- The dimensionality of the feature map is determined by the:
  - Size of the input image
  - Number of kernels
  - Padding (usually "same" or "valid")
  - "Stride", or shift of the kernel at each step

Dimensionality examples

Input	Kernel	Stride	Padding	Output
$100 \times 100 \times 3$	$5 \times 5 \times 32$	1	same	$100 \times 100 \times 32$
$100 \times 100 \times 1$	$5 \times 5 \times 32$	2	same	$50 \times 50 \times 32$
$100 \times 100 \times 3$	$5 \times 5 \times 32$	1	valid	???

- The number of channels has no impact on the depth of the output: the number of **kernels** determines the depth of the output
- The colour channels are convolved independently, then summed

Number of parameters example

- Input: $100 \times 100 \times 3$
- Kernel: $5 \times 5 \times 32$
- Bias terms: 32
- Total parameters: $5 \times 5 \times 3 \times 32 + 32 = 2430$

> *While convolution only happens in 2D, the kernel can be thought of as a 3D volume - there's a separate trainable kernel for each channel*

Pooling layers

Pooling layers are used to reduce the dimensionality of the feature maps (aka **downsampling**) by taking the maximum or average of a region

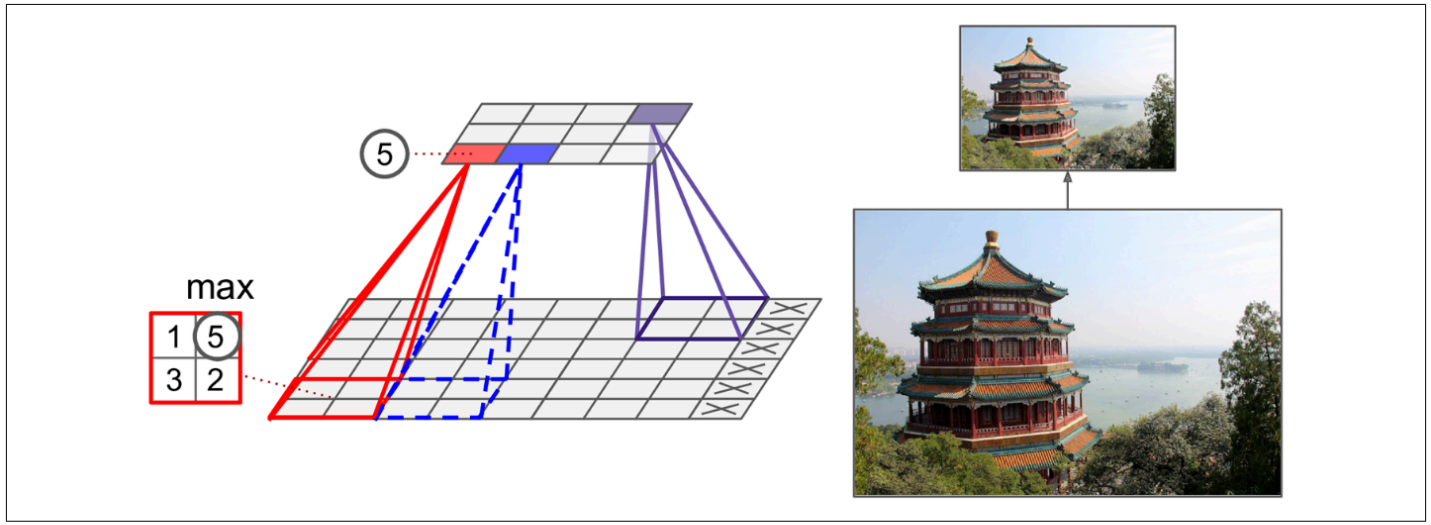

Figure 14-8. Max pooling layer (2 × 2 pooling kernel, stride 2, no padding)

- ❓ Why would we want to downsample?

Figure from Scikit-learn book

Putting it all together

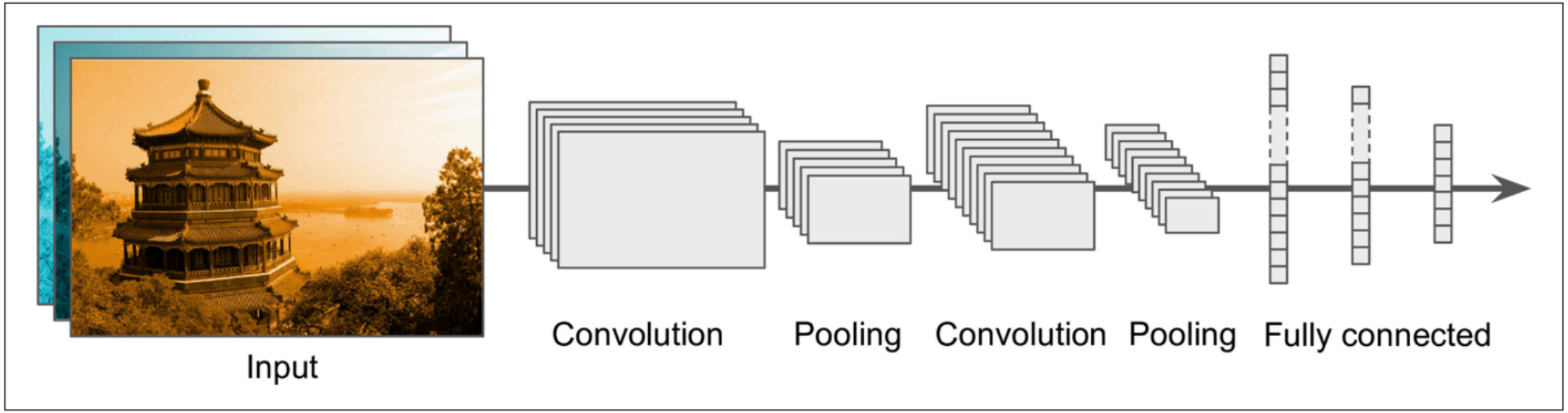

Figure 14-11. Typical CNN architecture

Figure from Scikit-learn book

Backpropagating CNNs

- After backpropagating through the fully connected head, we need to backpropagate through the:
  - Pooling layer
  - Convolution layer
- The **pooling layer** has no learnable parameters, but it needs to remember which input was maximum (all the rest get a gradient of 0)
- The convolution layer is trickier math, but it ends up needing another convolution - this time with the kernel **transposed**

LeNet (1998) vs AlexNet (2012)

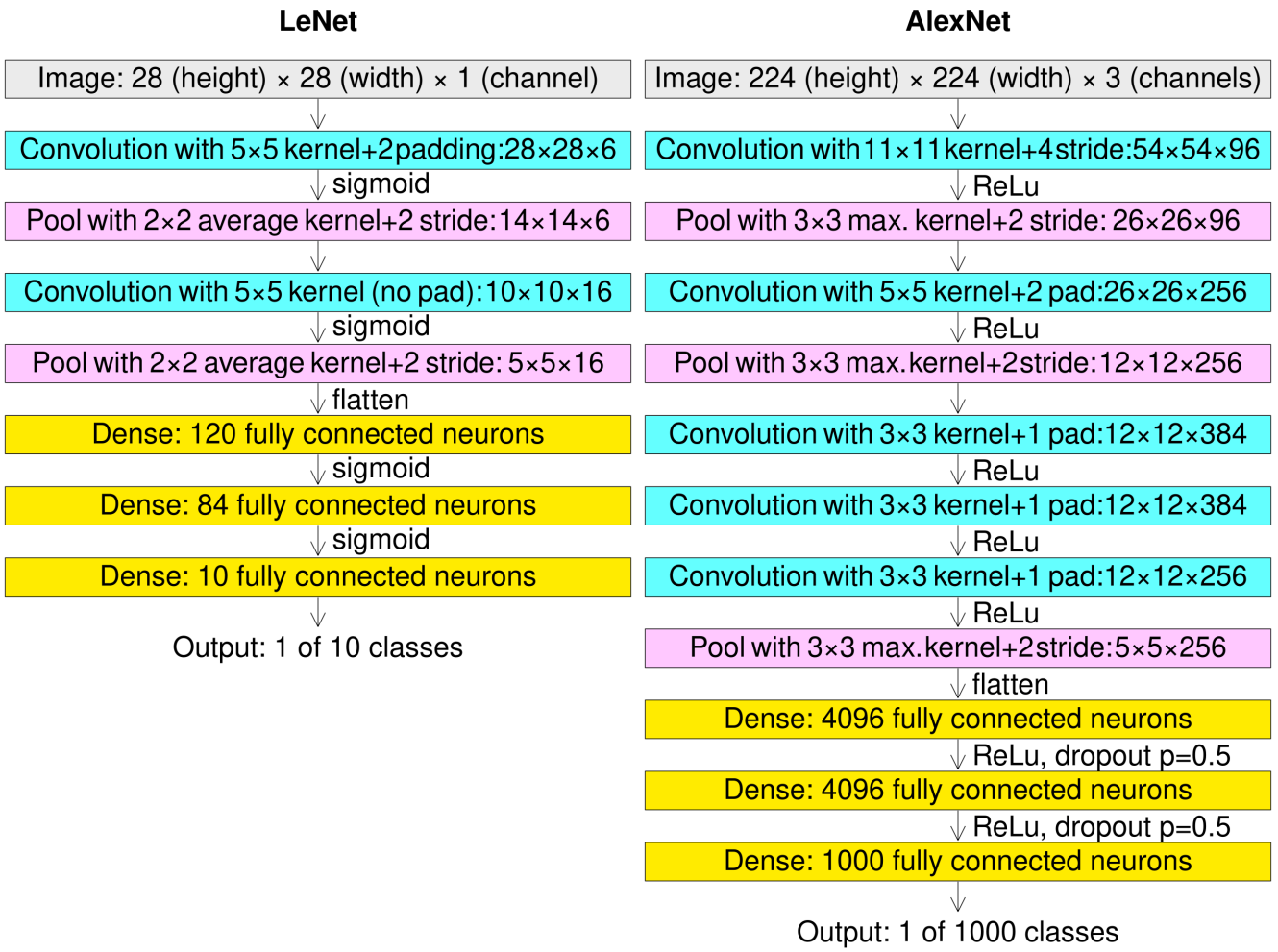

Sources: Wikipedi, AlexNet Paper, LeNet Paper

Inception v1 aka GoogLeNet (2014)

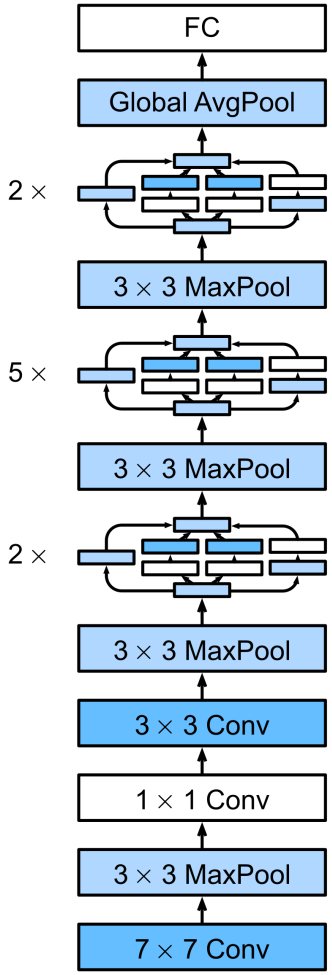

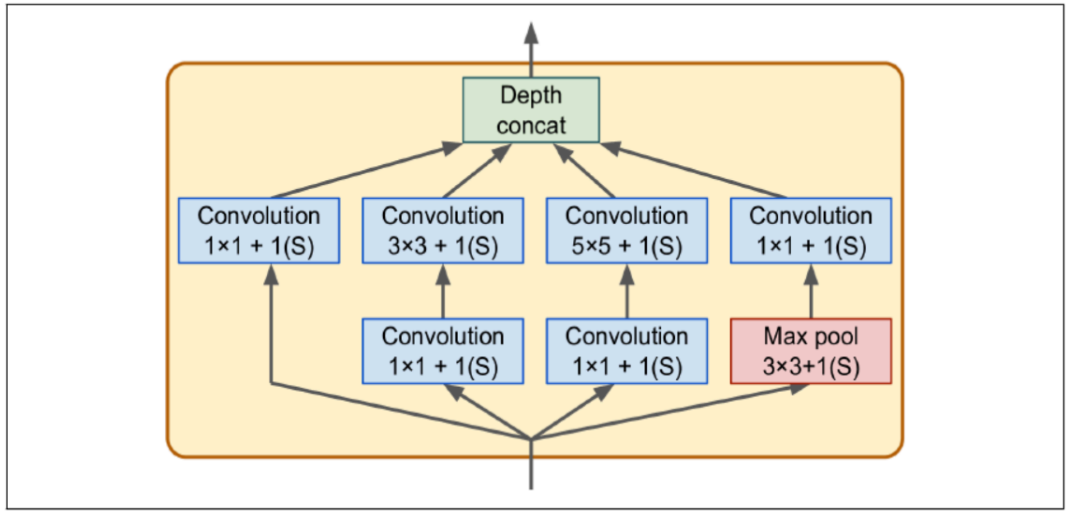

Figure 14-14. Inception module

- Struggled with vanishing gradients
- v2 introduced batch normalization

Sources: Wikipedia, GoogLeNet Paper

VGG (2014)

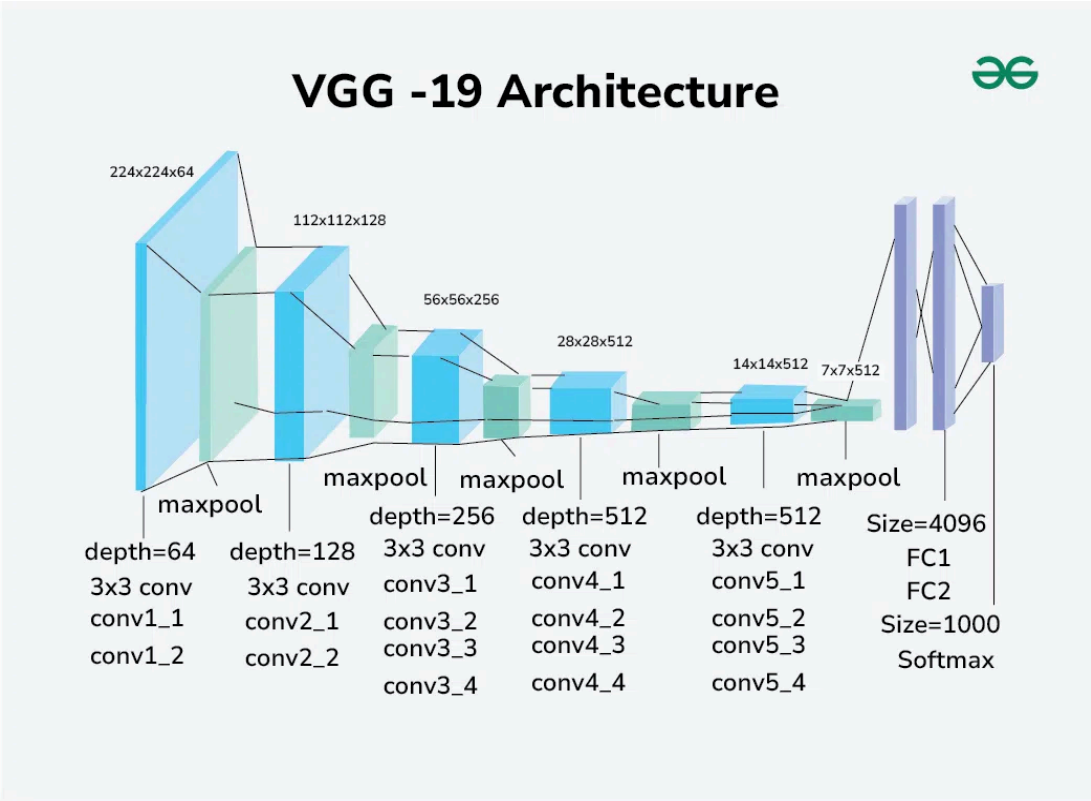

- Simple architecture, but "very" deep (16 or 19 layers)
- Fixed the convolution hyperparameters and focused on depth

Source: VGG Paper

ResNet (2015)

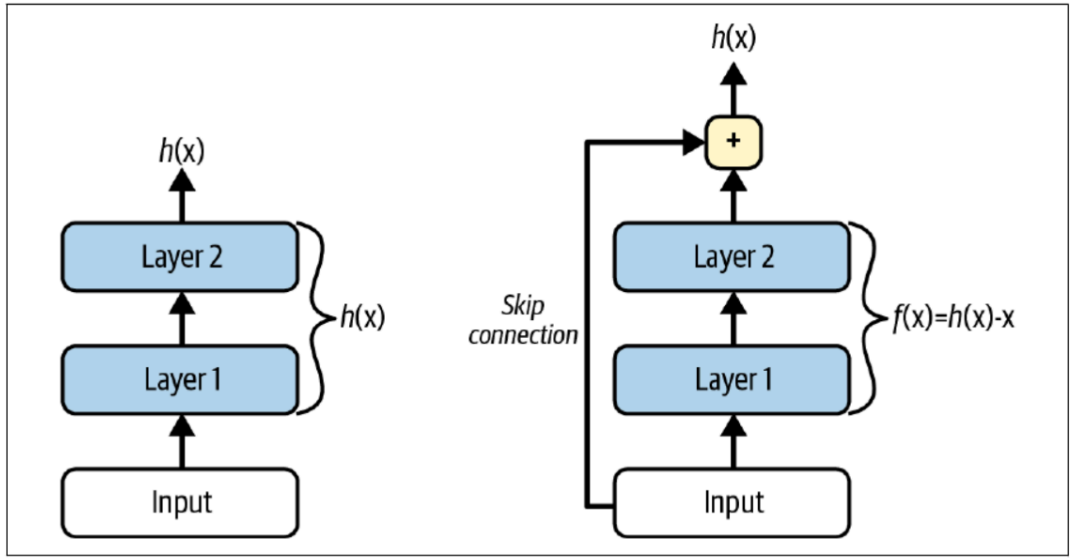

Figure 14-16. Residual learning

- Key innovation: easier to learn "identity" functions ($f(x) = x$)
- If a layer outputs 0, it doesn't kill the gradient
- Even deeper, e.g. ResNet-152

Source: ResNet Paper

Transfer Learning

> *"If I have seen further, it is by standing on the shoulder of giants"*
> *-- Isaac Newton*

- **Transfer learning** copy pastes a trained network into a new task
- You can select which layers to keep, which to freeze, and which to re-train
- You can also drop new layers on top of the old ones
- Most of the time you want to freeze the early layers and add a new "head"

Data Augmentation

- Garbage in, garbage out
- We can artificially increase diversity with data augmentation:
  - Random crops, flips, rotations
  - Rescaling/resizing
  - Changing colours
- AutoAugment does a bunch of this automatically

Next up: RNNs