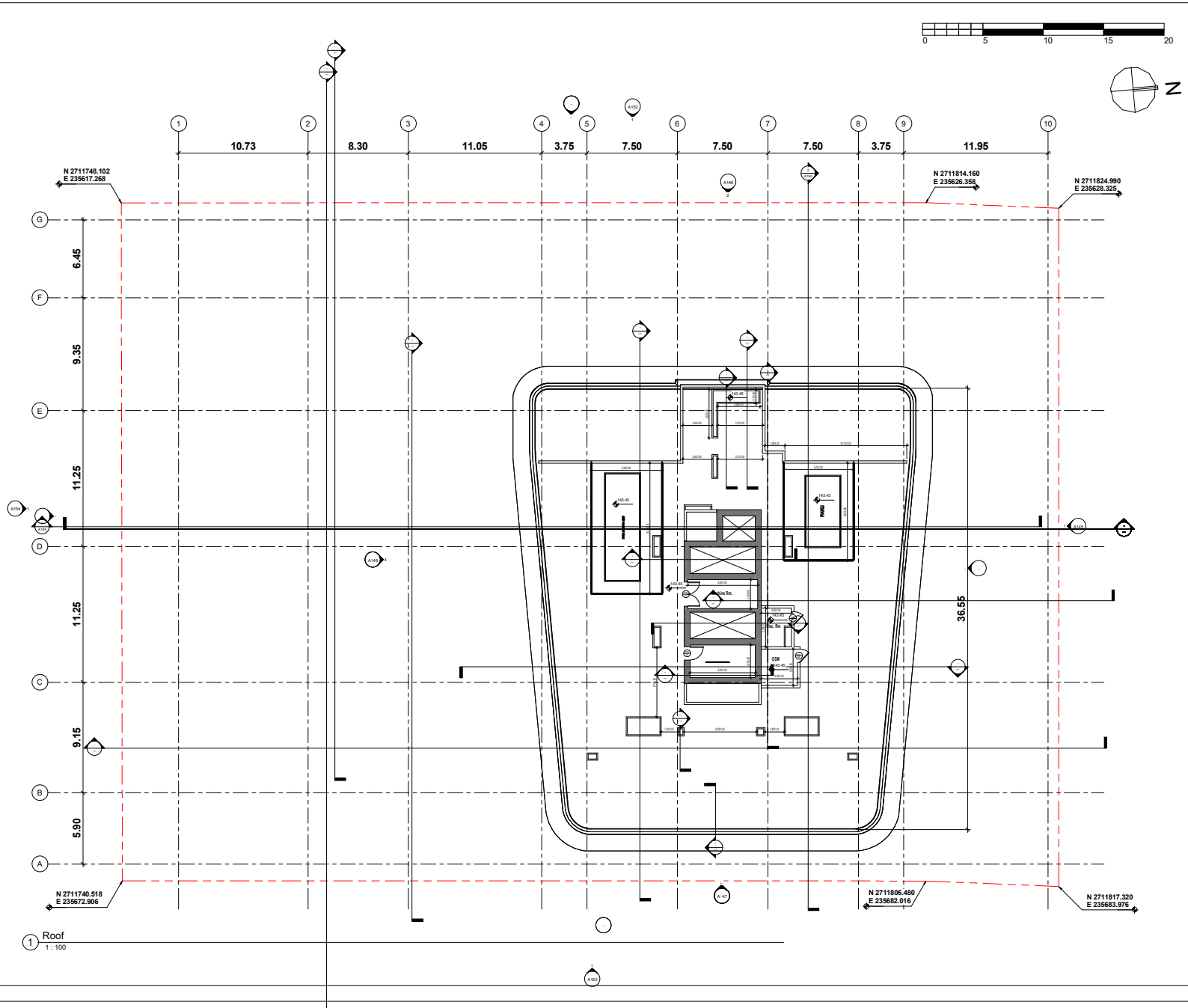

1 Roof
1 : 100

LAND KEY :

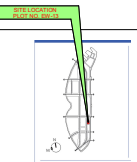

GENERAL NOTES:

REV. NO.	DESCRIPTION	DATE

OWNER / MASTER DEVELOPER:

AL SOWAH SQUARE PROPERTIES L.L.C.

Memcura Buildings, Murcor Road & Mohammed Bin Khalifa Street, Abu Dhabi, UAE

SUB DEVELOPER:

SAMA EMIRATES HOLDING GROUP LLC

CONSULTANT:

PROJECT NAME:

AL MARYAH ISLAND EW-13

ZONE :

AL MARYAH ISLAND

SECTOR NO :	PLOT NO :
-	EW-13

PROJECT DESCRIPTION :

PROPOSED NEW 2B+G+3P+35F+RF+TRF
RESIDENTIAL & COMMERCIAL BUILDING CONSISTING OF
2 BASEMENT PARKING LEVEL, GROUND FLOOR,
3 PODIUM FLOORS
36 RESIDENTIAL FLOORS TOWER.

IN PLOT NO EW-13
AL MARYAH ISLAND ,ABU DHABI.

DRAWING TITLE :

Roof

DRAWING NO :	REVISION NO :
A143	
SUBMISSION DATE :	SCALE :
09/27/24	1 : 100
PROJECT ID :	DRAWING SIZE :
0001	A0

OFFICIAL USE ONLY :

OFFICIAL USE ONLY :