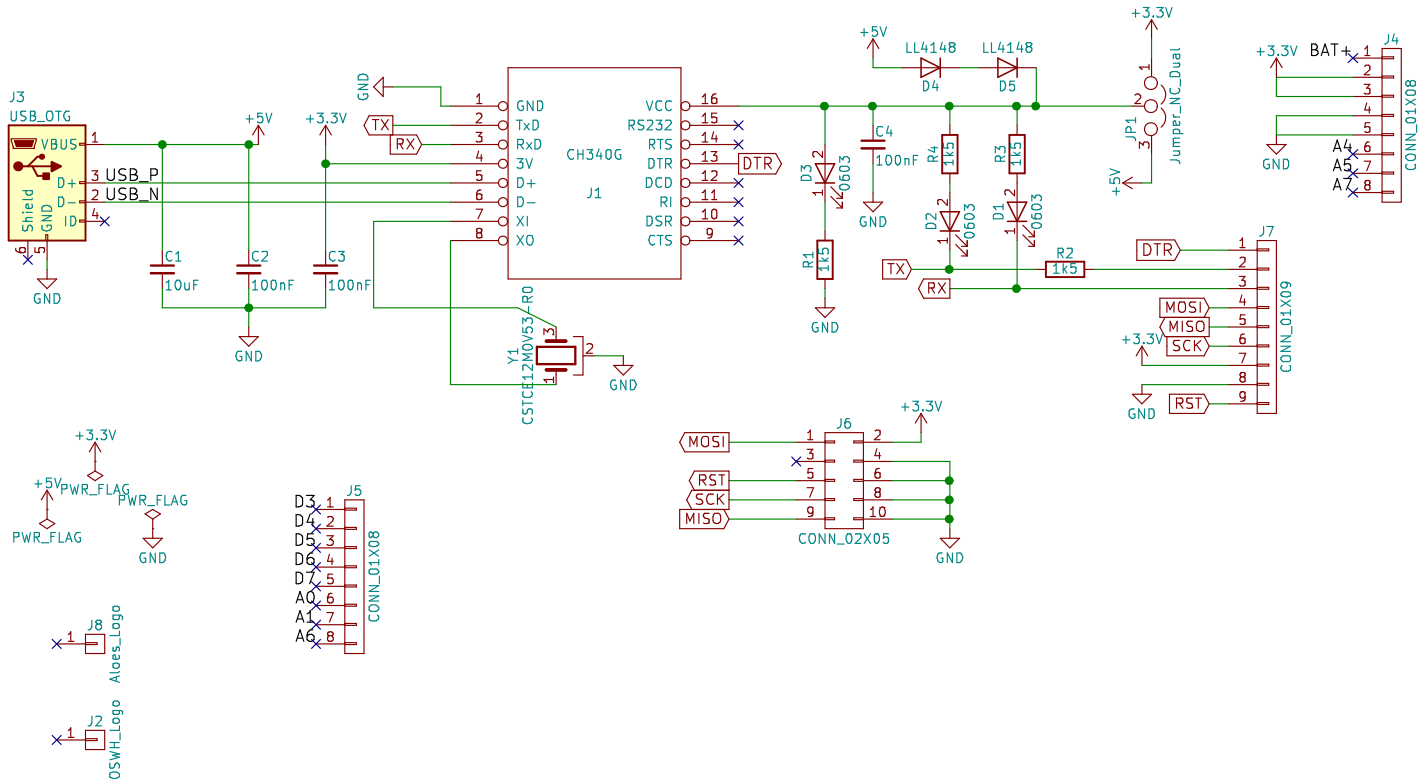

Extension #5 ISP header – USB to TTL

Sheet: /
File: Cosmonode_ext05.sch

Title: USB to TTL mini

Size: A4	Date: 2017-07-24	Rev:
KiCad E.D.A. kicad 4.0.7-e2-637658ubuntu17.04.1		Id: 1/1