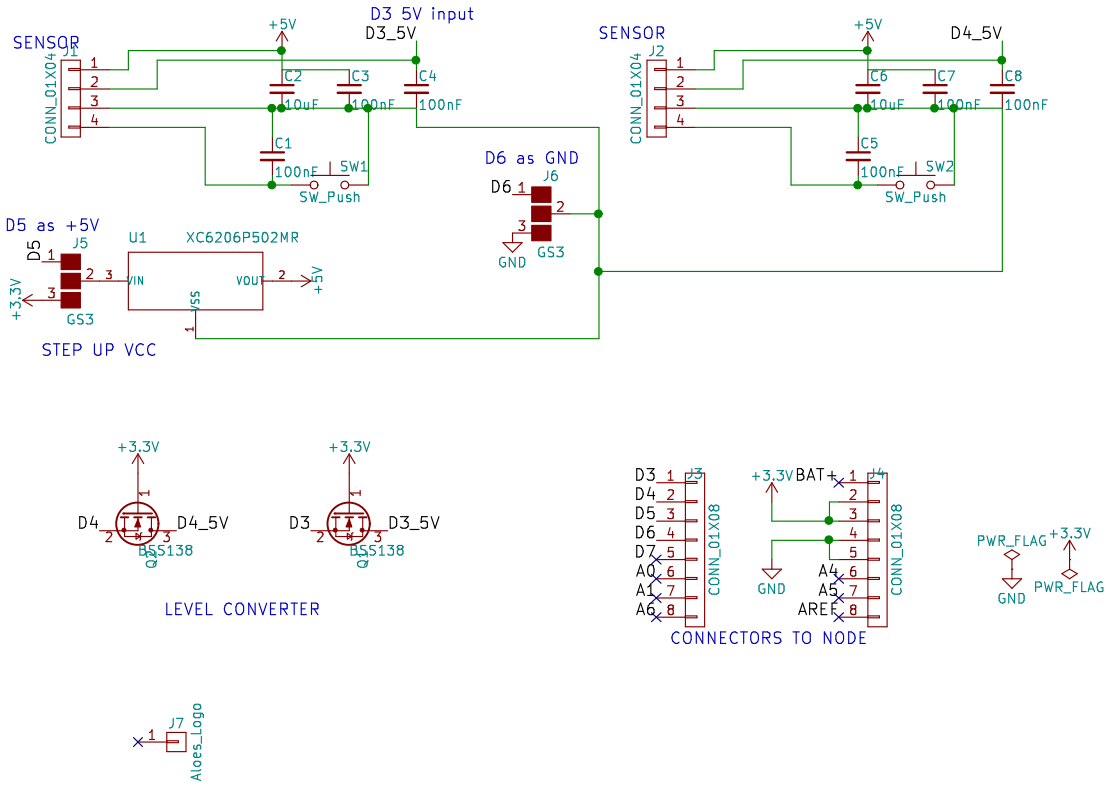

Shield for cosmonode
Connection to 5V XKC YV sensor

Sheet: /
File: Cosmonode_ext02.sch

Title: Cosmonode_ext_02

Size: A4	Date: 2017-08-01	Rev:
KiCad E.D.A. kicad 4.0.7-e2-637658ubuntu17.04.1		Id: 1/1