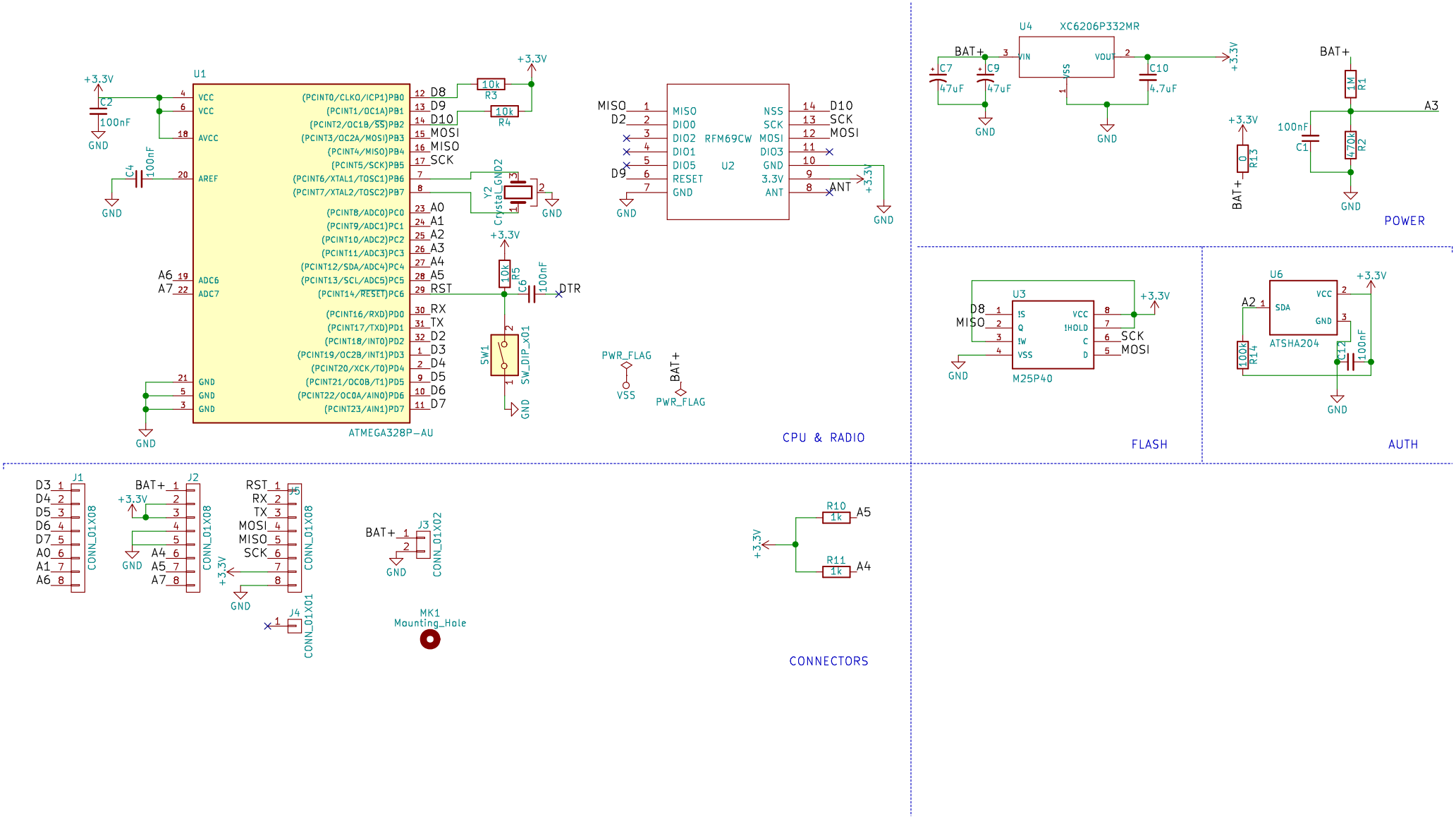
U1
ATMEGA328P-AU
VCC
AVCC
AREF
ADC6
ADC7
GND
(PCINT0/CLKO/ICP1)PB0
(PCINT1/OC1A)PB1
(PCINT2/OC1B/SS)PB2
(PCINT3/OC2A/MOSI)PB3
(PCINT4/MISO)PB4
(PCINT5/SCK)PB5
(PCINT6/XTAL1/TOSC1)PB6
(PCINT7/XTAL2/TOSC2)PB7
(PCINT8/ADC0)PC0
(PCINT9/ADC1)PC1
(PCINT10/ADC2)PC2
(PCINT11/ADC3)PC3
(PCINT12/SDA/ADC4)PC4
(PCINT13/SCL/ADC5)PC5
(PCINT14/RESET)PC6
(PCINT16/RXD)PD0
(PCINT17/TXD)PD1
(PCINT18/INT0)PD2
(PCINT19/OC2B/INT1)PD3
(PCINT20/XCK/T0)PD4
(PCINT21/OC0B/T1)PD5
(PCINT22/OC0A/AIN0)PD6
(PCINT23/AIN1)PD7
D8 D9 D10 MOSI MISO SCK A0 A1 A2 A3 A4 A5 RST RX TX D2 D3 D4 D5 D6 D7
+3.3V
C2 100nF
C4 100nF
R3 10k
R4 10k
Y2 Crystal_GND2
R5 10k
C6 100nF
DTR
SW1 SW_DIP_x01
U2 RFM69CW
MISO DIO0 DIO2 DIO1 DIO5 RESET GND
NSS SCK MOSI DIO3 GND 3.3V ANT
ANT
PWR_FLAG
VSS
BAT+
U4 XC6206P332MR
VIN VSS VOUT
C7 47uF
C9 47uF
C10 4.7uF
R13 0
R1 1M
R2 470k
C1 100nF
A3
POWER
U3 M25P40
!S Q !W VSS VCC !HOLD C D
SCK MOSI
FLASH
U6 ATSHA204
SDA VCC GND
A2
R14 100k
C12 100nF
AUTH
J1 CONN_01X08
J2 CONN_01X08
J5 CONN_01X08
J3 CONN_01X02
J4 CONN_01X01
MK1 Mounting_Hole
R10 1k
R11 1k
A5
A4
CONNECTORS