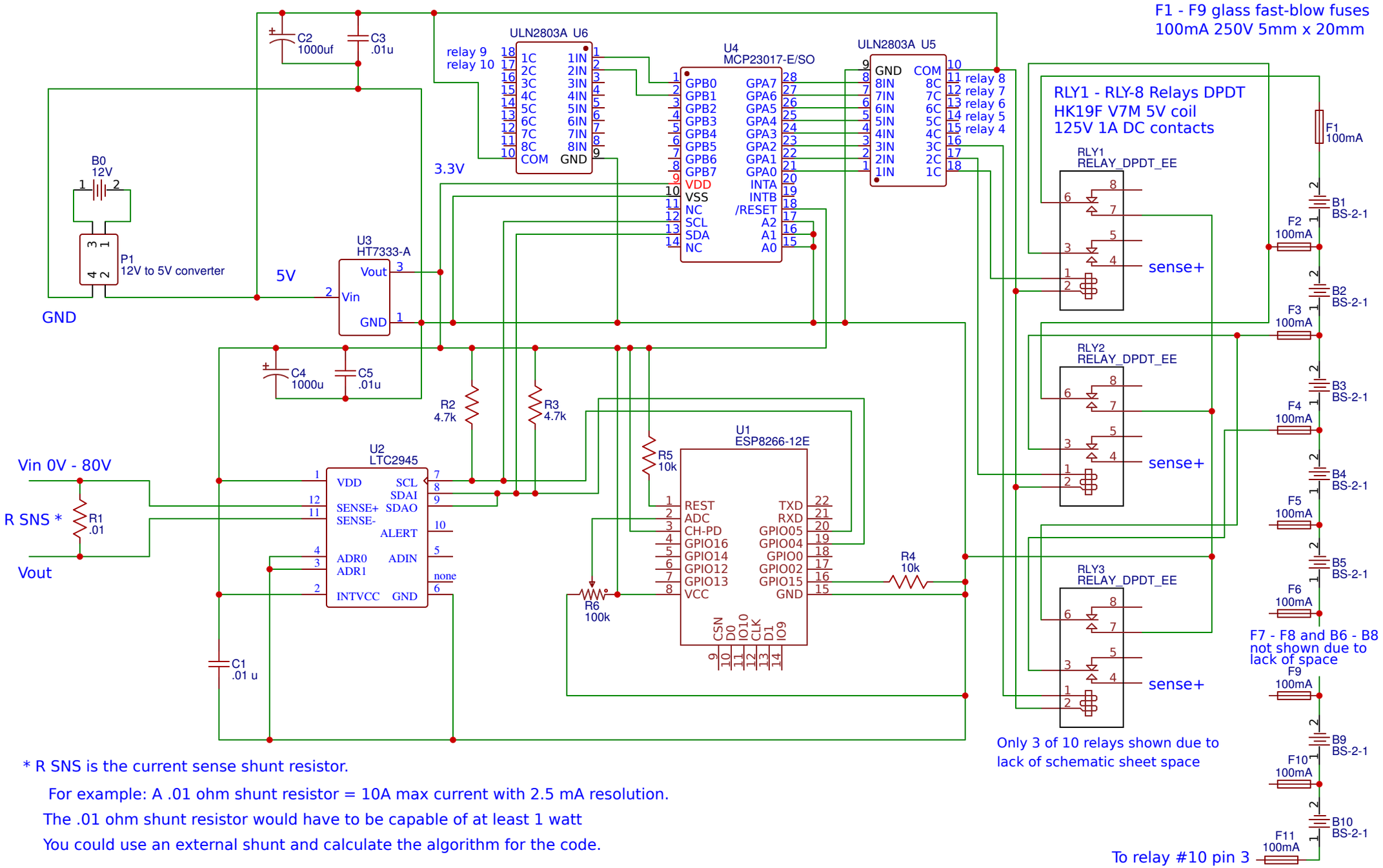

* R SNS is the current sense shunt resistor.

For example: A .01 ohm shunt resistor = 10A max current with 2.5 mA resolution.

The .01 ohm shunt resistor would have to be capable of at least 1 watt

You could use an external shunt and calculate the algorithm for the code.

To only measure voltage input:

Disconnect the shunt resistor and input the voltage to be measured into SENSE + and Ground.

No connection to SENSE -

Note: R4 and R5 resistors and connections not needed if using a esp8266-12E development board.

TITLE: LTC Battery Voltages Scanner	REV: 1.0
Date: 2019-01-03	Sheet: 1/1
EasyEDA V5.8.22	Drawn By: experimentool