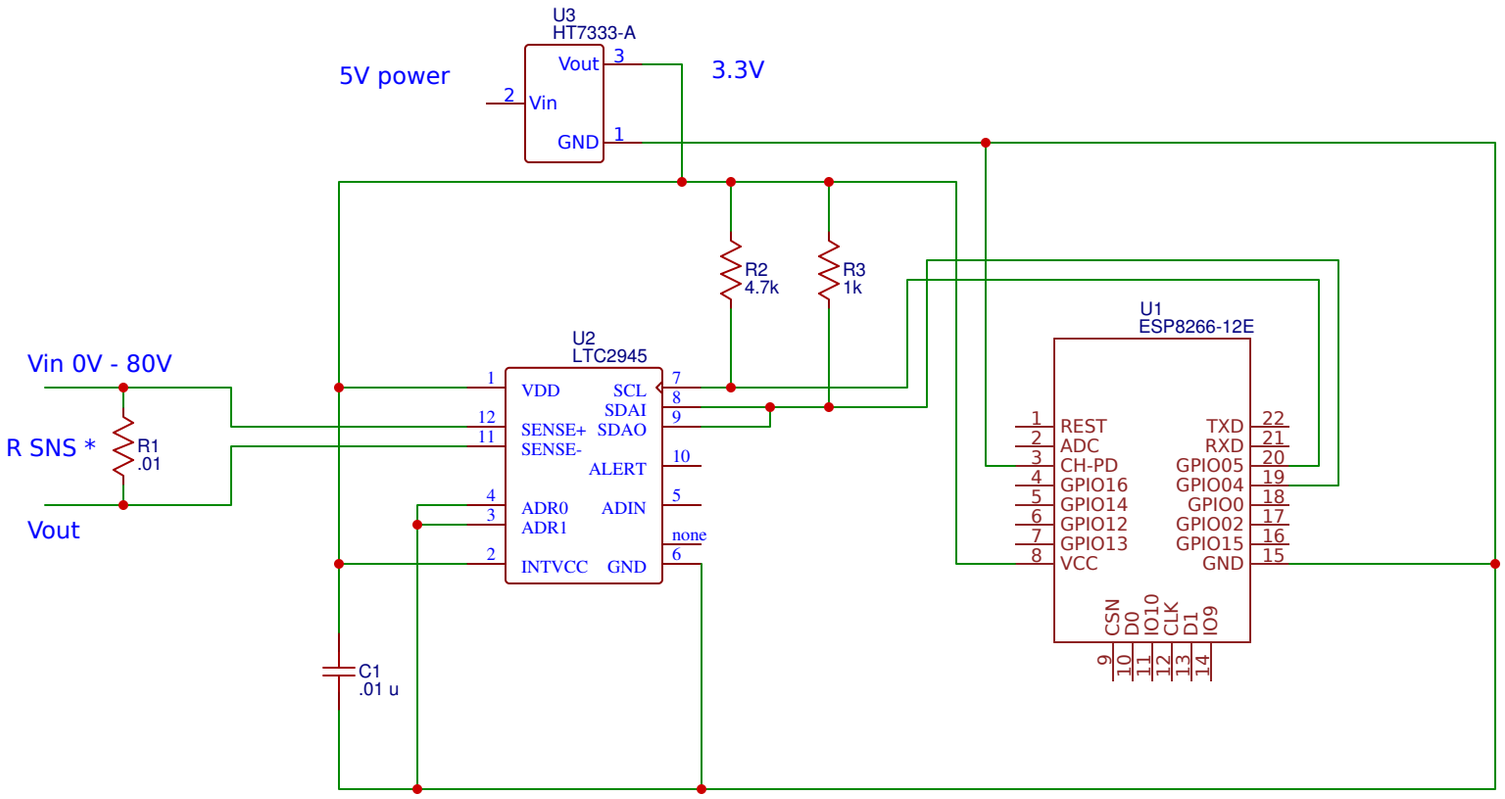


R SNS is the current sense shunt resistor.

For example: A .01 ohm shunt resistor = 10A max current with 2.5 mA resolution.

The .01 ohm shunt resistor would have to be capable of at least 1 watt

You could use an external shunt and calculate the algorithm for the code.

To only measure voltage input:

Disconnect the shunt resistor and input the voltage to be measured into SENSE + and Ground.

No connection to SENSE -

| | |
|---|---|
| TITLE: New Schematic | REV: 1.0 |
| Date: 2018-12-30 | Sheet: 1/1 |
| EasyEDA V5.8.22 | Drawn By: experimentool |