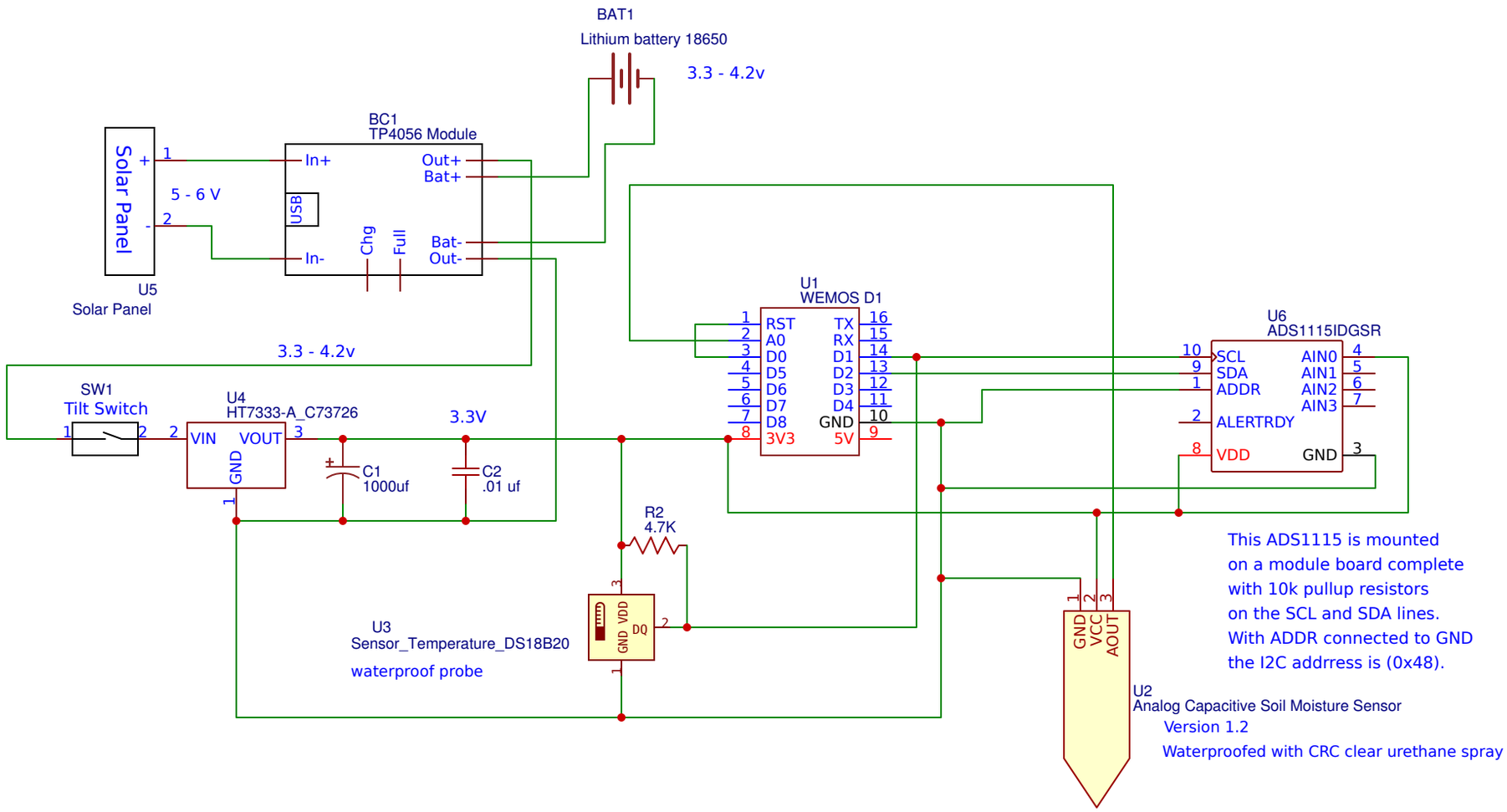

SW1 - Glass tilt switch provides a way to turn off or RESET the microcontroller circuit without opening the waterproof box cover.
U2, U3 and U5 all have waterproof connectors not shown on the schematic.
R2 is a pullup resistor for the one-wire DS18B20 temperature measuring sensor.
A usb charging cable accessory has also been provided to plug in the place of the solar panel
The initial setting of the transmit timing has been set at once every 30 minutes. Max setting is 60 minutes.
The microcontroller goes into deep sleep between transmissions to save battery capacity.

TITLE: wemosd1miniaccesspointNEW	REV: 1.0
Date: 2018-12-04	Sheet: 1/1
EasyEDA V5.8.22	Drawn By: experimentool