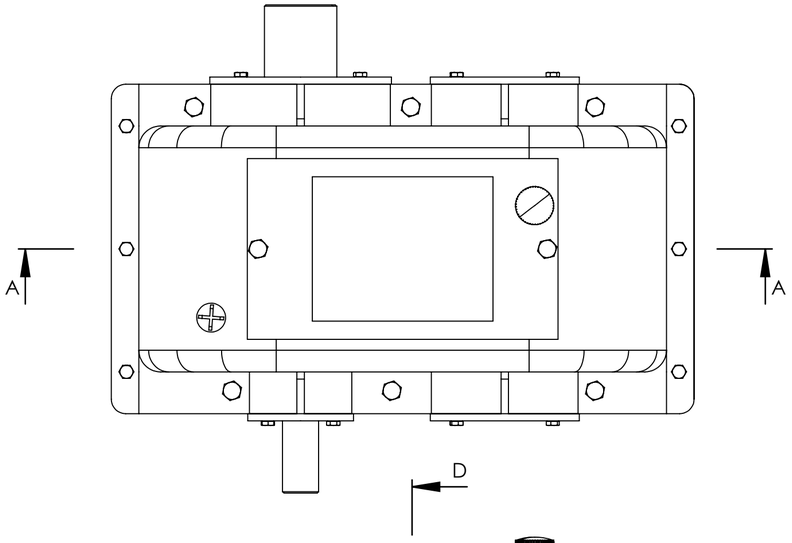

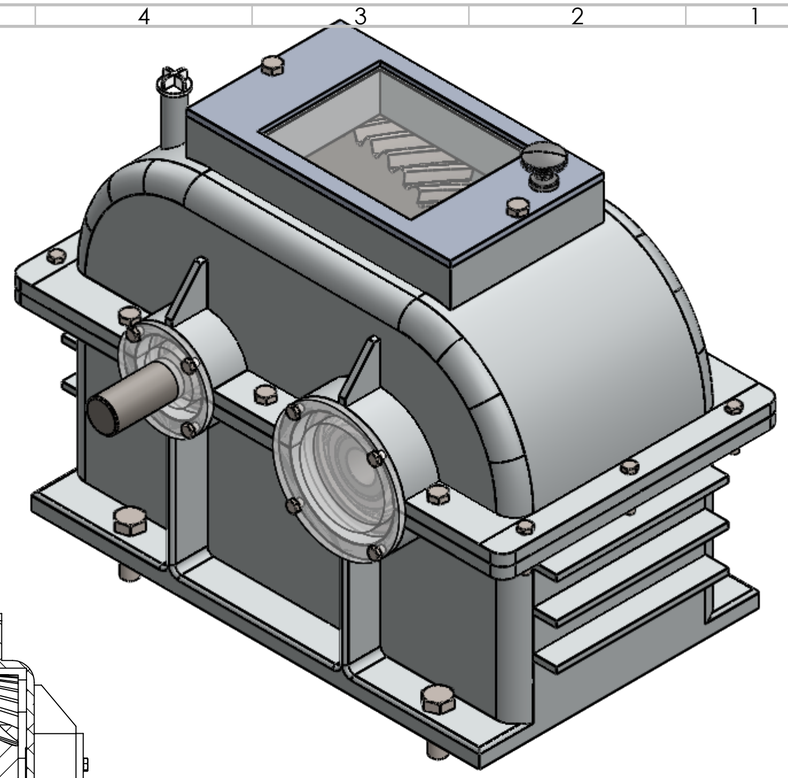

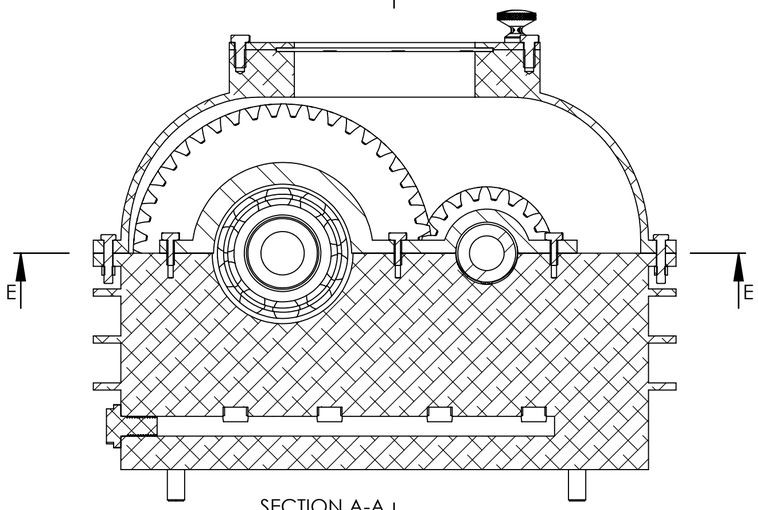

SECTION A-A
SCALE 1 : 6

D

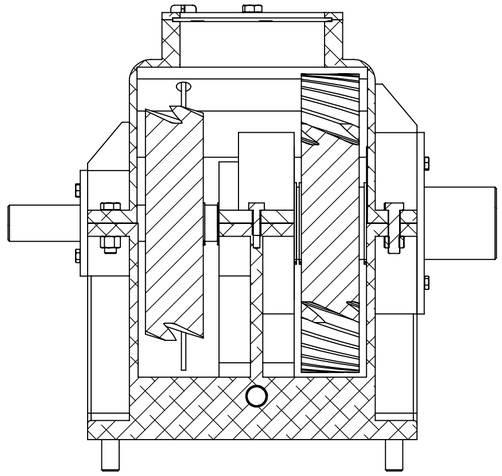

SECTION D-D
SCALE 1 : 6

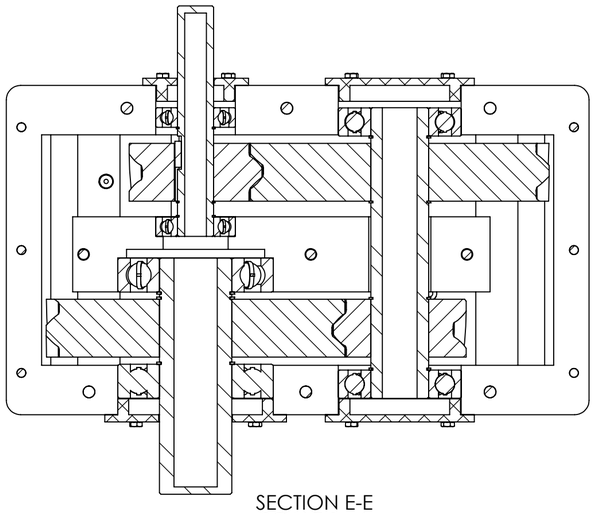

SECTION E-E
SCALE 1 : 6

UNLESS OTHERWISE SPECIFIED: DIMENSIONS ARE IN MILLIMETERS SURFACE FINISH: TOLERANCES: LINEAR: ANGULAR:	FINISH:		DEBURR AND BREAK SHARP EDGES	DO NOT SCALE DRAWING	REVISION
	NAME	SIGNATURE	DATE	TITLE: Gearbox assembly	
DRAWN					
CHK'D					
APPV'D					
MFG					
Q.A				MATERIAL:	DWG NO. A2
				WEIGHT:	SCALE:1:10 SHEET 1 OF 1