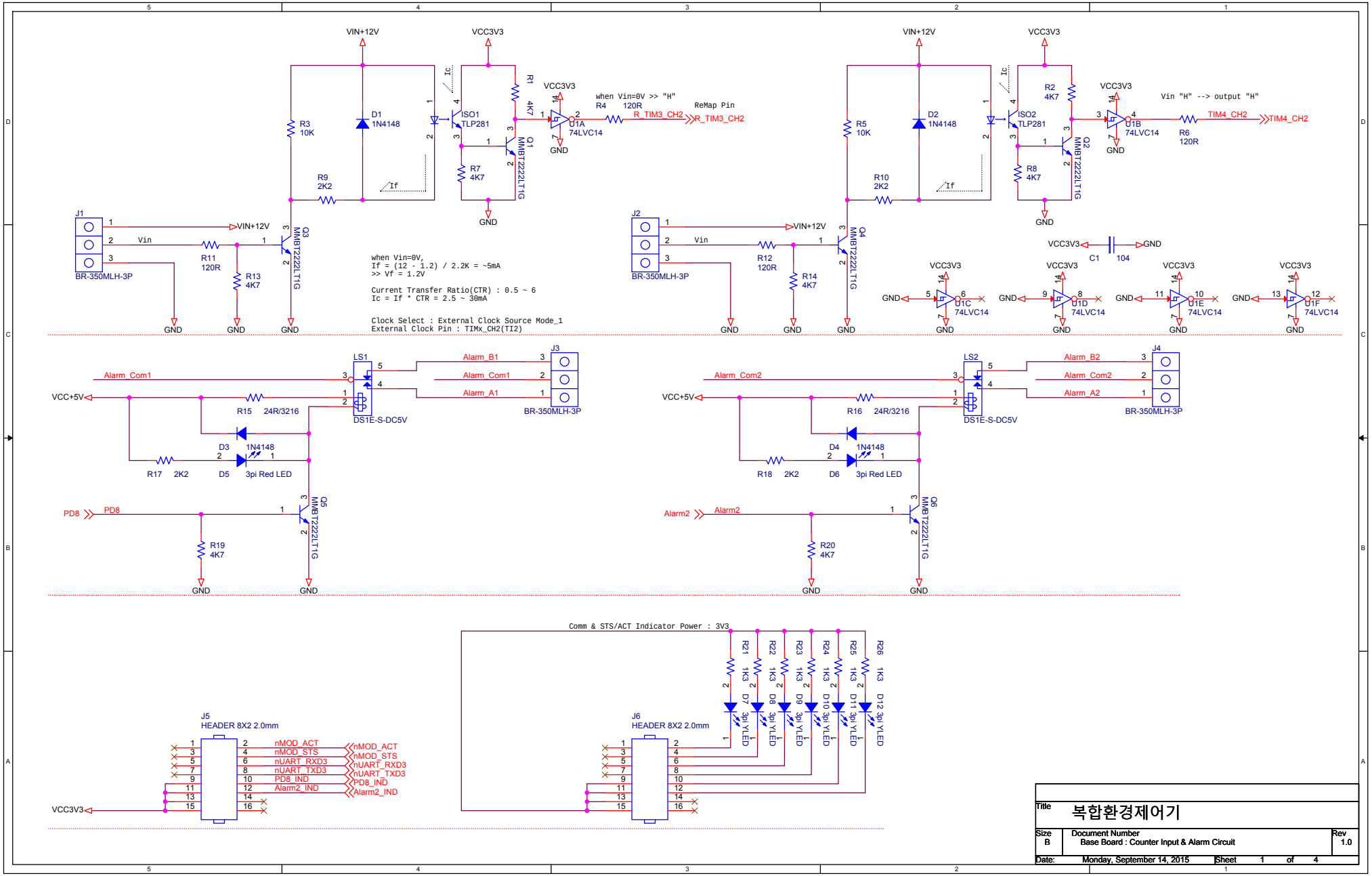
VIN+12V
VCC3V3
R3 10K
D1 1N4148
R9 2K2
ISO1 TLP281
R1 4K7
R7 4K7
Q1 MMBT2222LT1G
U1A 74LVC14
R4 120R
when Vin=0V >> "H"
ReMap Pin
R_TIM3_CH2
GND
J1
BR-350MLH-3P
Vin
R11 120R
R13 4K7
Q3 MMBT2222LT1G
when Vin=0V,
If = (12 - 1.2) / 2.2K = ~5mA
>> Vf = 1.2V
Current Transfer Ratio(CTR) : 0.5 ~ 6
Ic = If * CTR = 2.5 ~ 30mA
Clock Select : External Clock Source Mode_1
External Clock Pin : TIMx_CH2(TI2)
R5 10K
D2 1N4148
R10 2K2
ISO2 TLP281
R2 4K7
R8 4K7
Q2 MMBT2222LT1G
U1B 74LVC14
Vin "H" --> output "H"
R6 120R
TIM4_CH2
J2
R12 120R
R14 4K7
Q4 MMBT2222LT1G
C1 104
U1C 74LVC14
U1D 74LVC14
U1E 74LVC14
U1F 74LVC14
LS1
DS1E-S-DC5V
Alarm_Com1
Alarm_B1
Alarm_A1
J3
VCC+5V
R15 24R/3216
D3 1N4148
R17 2K2
D5 3pi Red LED
PD8
R19 4K7
Q5 MMBT2222LT1G
LS2
Alarm_Com2
Alarm_B2
Alarm_A2
J4
R16 24R/3216
D4 1N4148
R18 2K2
D6 3pi Red LED
Alarm2
R20 4K7
Q6 MMBT2222LT1G
Comm & STS/ACT Indicator Power : 3V3
R21 1K3
R22 1K3
R23 1K3
R24 1K3
R25 1K3
R26 1K3
D7 3pi YLED
D8 3pi YLED
D9 3pi YLED
D10 3pi YLED
D11 3pi YLED
D12 3pi YLED
J5
HEADER 8X2 2.0mm
nMOD_ACT
nMOD_STS
nUART_RXD3
nUART_TXD3
PD8_IND
Alarm2_IND
J6
Title
복합환경제어기
Size B
Document Number
Base Board : Counter Input & Alarm Circuit
Rev 1.0
Date: Monday, September 14, 2015
Sheet 1 of 4

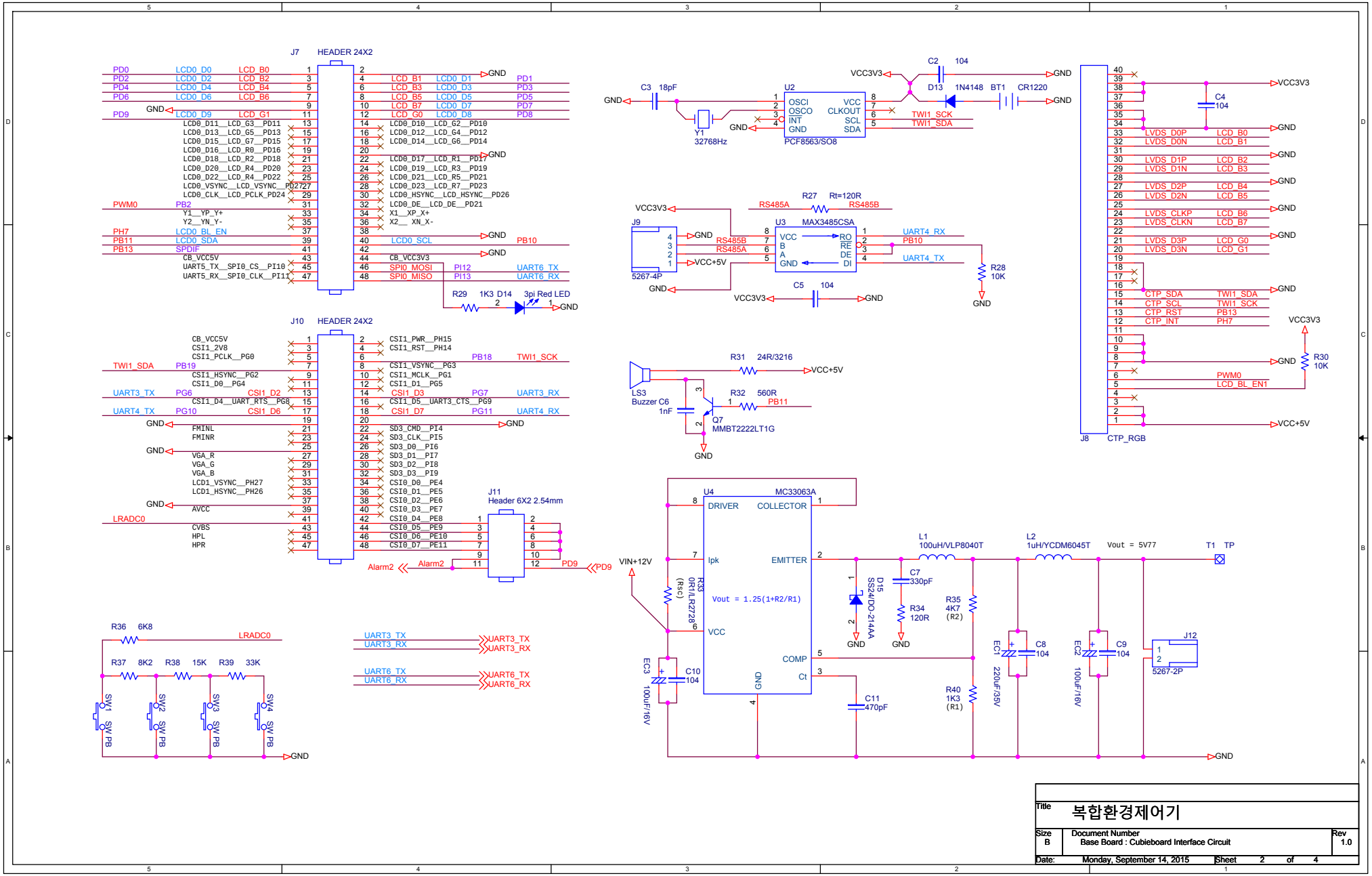

Title	복합환경제어기
Size B	Document Number Base Board : Cubieboard Interface Circuit
Rev 1.0	
Date: Monday, September 14, 2015	Sheet 2 of 4

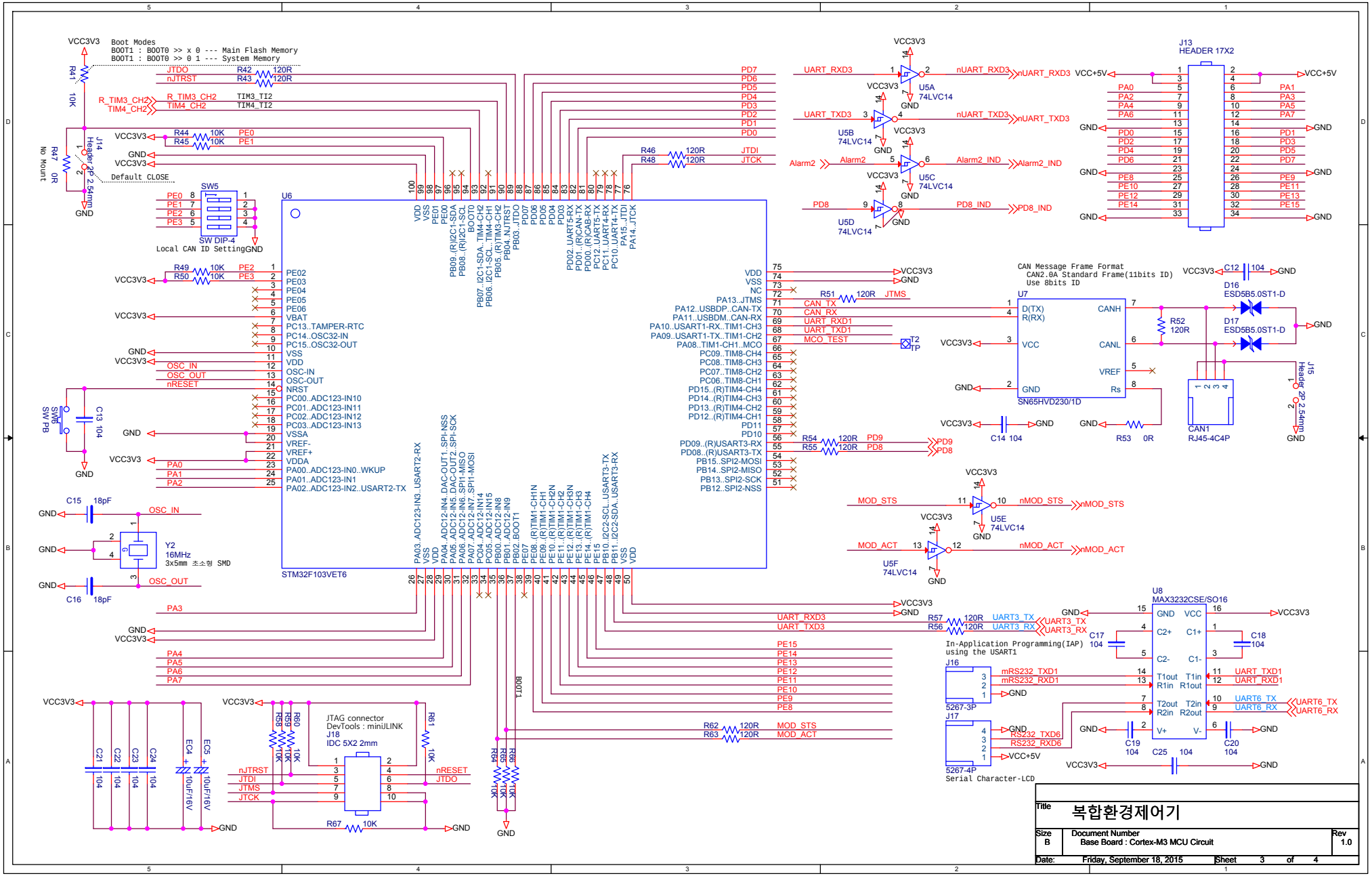
Boot Modes
BOOT1 : BOOT0 >> x 0 --- Main Flash Memory
BOOT1 : BOOT0 >> 0 1 --- System Memory
Default CLOSE
Local CAN ID Setting
SW DIP-4
STM32F103VET6
Y2
16MHz
3x5mm 초소형 SMD
JTAG connector
DevTools : miniJLINK
J18
IDC 5X2 2mm
J13
HEADER 17X2
CAN Message Frame Format
CAN2.0A Standard Frame(11bits ID)
Use 8bits ID
SN65HVD230/1D
CAN1
RJ45-4C4P
MAX3232CSE/SO16
In-Application Programming(IAP)
using the USART1
5267-3P
5267-4P
Serial Character-LCD
복합환경제어기
Base Board : Cortex-M3 MCU Circuit
Friday, September 18, 2015

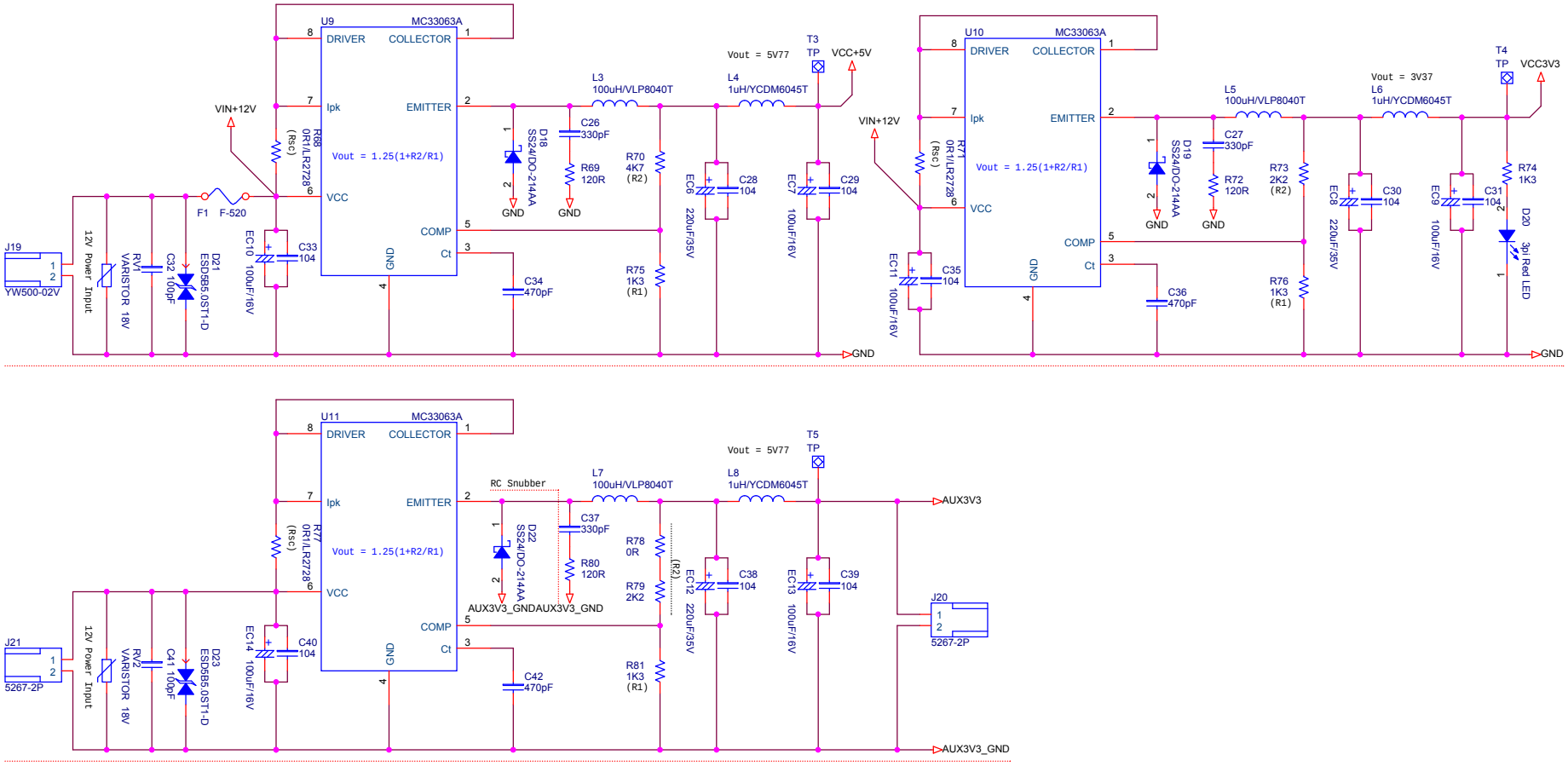

Title	복합환경제어기	
Size B	Document Number Base Board : Power Circuit	Rev 1.0
Date: Friday, September 18, 2015	Sheet 4 of 4	