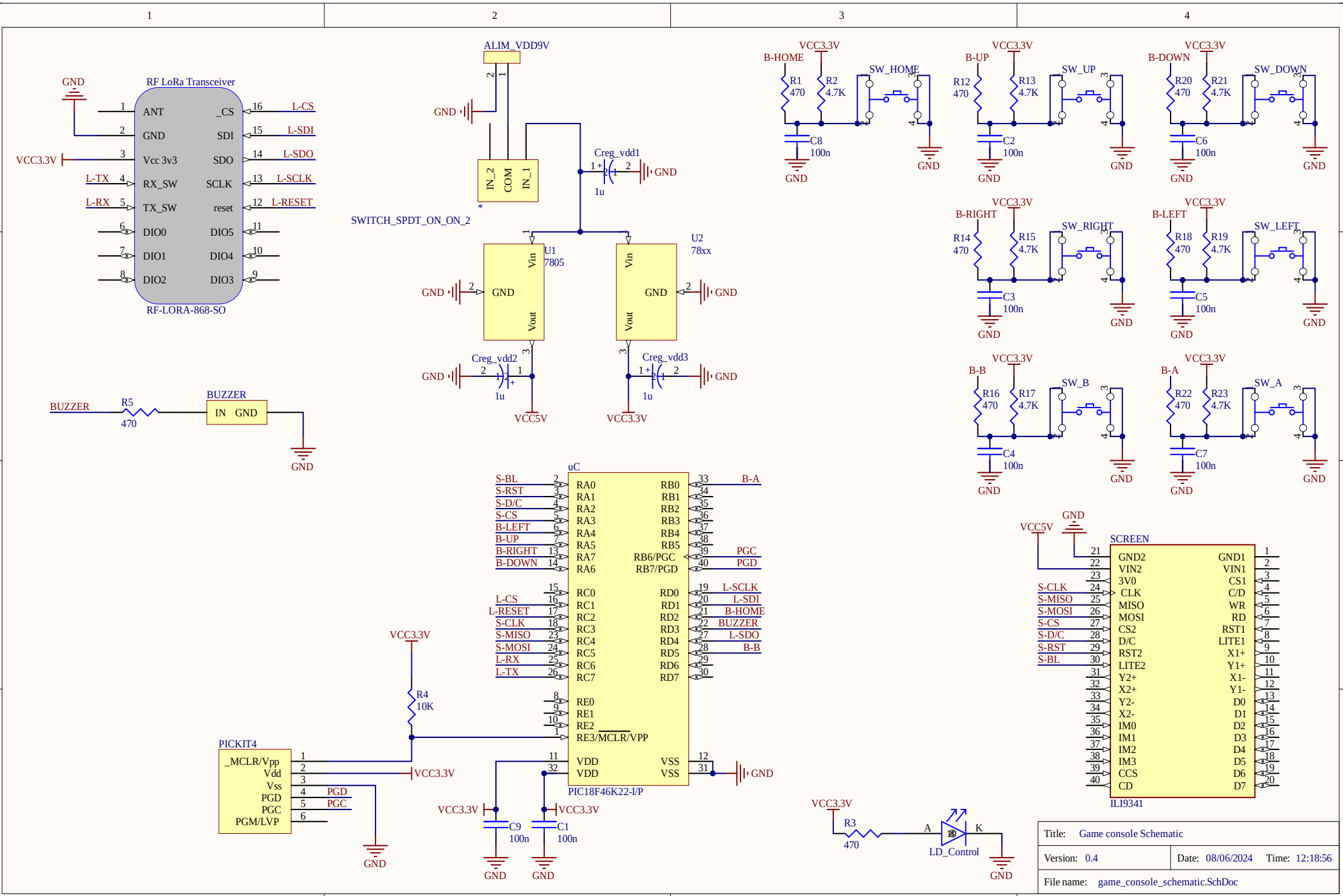
RF LoRa Transceiver
ANT
GND
Vcc 3v3
RX_SW
TX_SW
DIO0
DIO1
DIO2
_CS
SDI
SDO
SCLK
reset
DIO5
DIO4
DIO3
L-CS
L-SDI
L-SDO
L-SCLK
L-RESET
VCC3.3V
L-TX
L-RX
RF-LORA-868-SO
ALIM_VDD9V
IN_2
COM
IN_1
SWITCH_SPDT_ON_ON_2
Creg_vdd1
1u
U1
7805
Vin
Vout
U2
78xx
Creg_vdd2
Creg_vdd3
VCC5V
BUZZER
R5
470
IN GND
B-HOME
B-UP
B-DOWN
B-RIGHT
B-LEFT
B-B
B-A
SW_HOME
SW_UP
SW_DOWN
SW_RIGHT
SW_LEFT
SW_B
SW_A
R1 470
R2 4.7K
C8 100n
R12 470
R13 4.7K
C2 100n
R20 470
R21 4.7K
C6 100n
R14 470
R15 4.7K
C3 100n
R18 470
R19 4.7K
C5 100n
R16 470
R17 4.7K
C4 100n
R22 470
R23 4.7K
C7 100n
uC
RA0
RA1
RA2
RA3
RA4
RA5
RA7
RA6
RC0
RC1
RC2
RC3
RC4
RC5
RC6
RC7
RE0
RE1
RE2
RE3/MCLR/VPP
VDD
VDD
RB0
RB1
RB2
RB3
RB4
RB5
RB6/PGC
RB7/PGD
RD0
RD1
RD2
RD3
RD4
RD5
RD6
RD7
VSS
VSS
S-BL
S-RST
S-D/C
S-CS
B-LEFT
B-UP
B-RIGHT
B-DOWN
L-CS
L-RESET
S-CLK
S-MISO
S-MOSI
L-RX
L-TX
B-A
PGC
PGD
L-SCLK
L-SDI
B-HOME
BUZZER
L-SDO
B-B
PIC18F46K22-I/P
PICKIT4
_MCLR/Vpp
Vdd
Vss
PGD
PGC
PGM/LVP
R4
10K
C9 100n
C1 100n
SCREEN
GND2
VIN2
3V0
CLK
MISO
MOSI
CS2
D/C
RST2
LITE2
Y2+
X2+
Y2-
X2-
IM0
IM1
IM2
IM3
CCS
CD
GND1
VIN1
CS1
C/D
WR
RD
RST1
LITE1
X1+
Y1+
X1-
Y1-
D0
D1
D2
D3
D4
D5
D6
D7
ILI9341
R3
470
LD_Control
A
K
Title: Game console Schematic
Version: 0.4
Date: 08/06/2024
Time: 12:18:56
File name: game_console_schematic.SchDoc