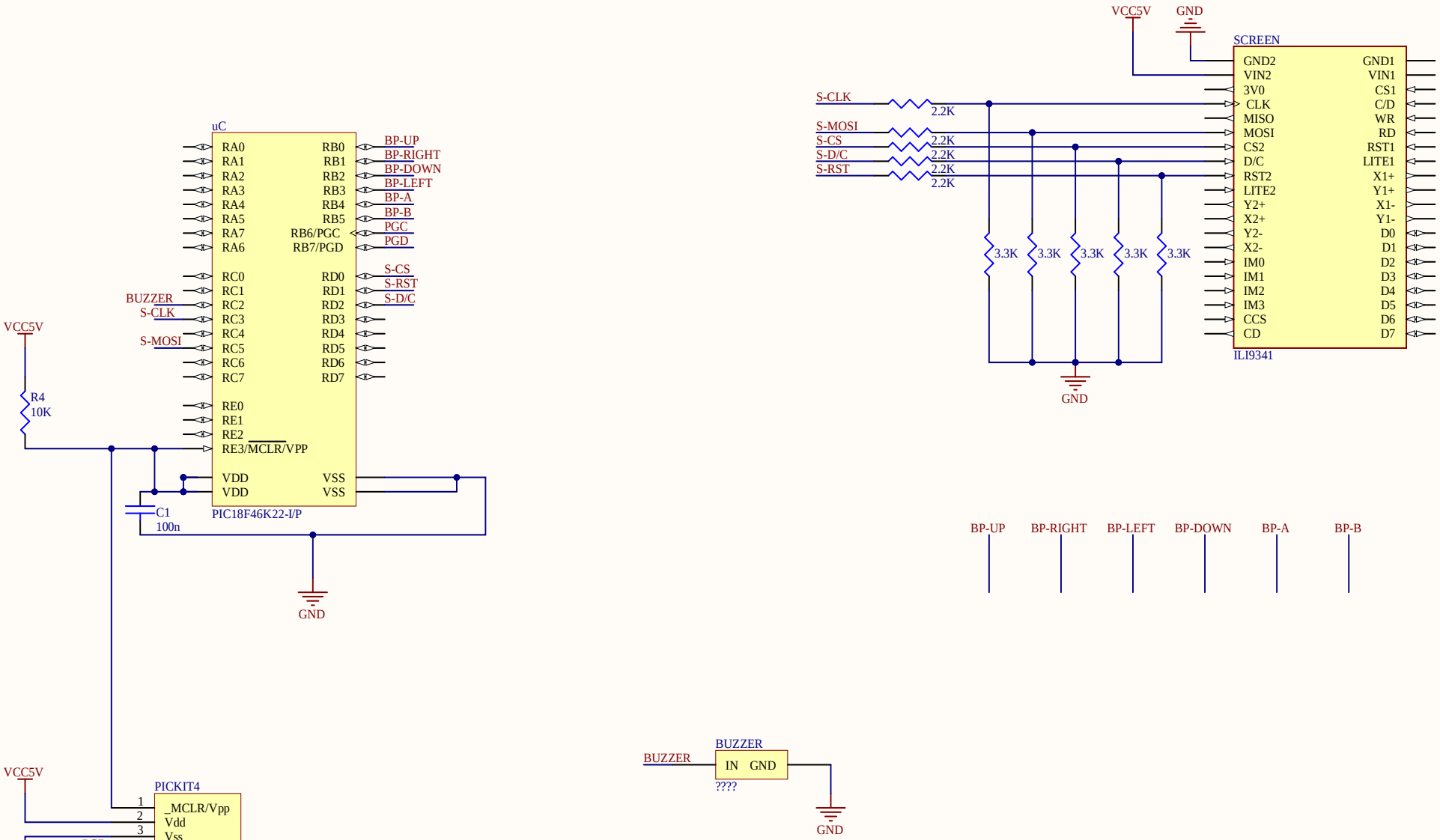

Title: Game console Schematic		
Version: 1.0	Date: 28/05/2024	Time: 21:10:39
File name: game_console_schematic.SchDoc		