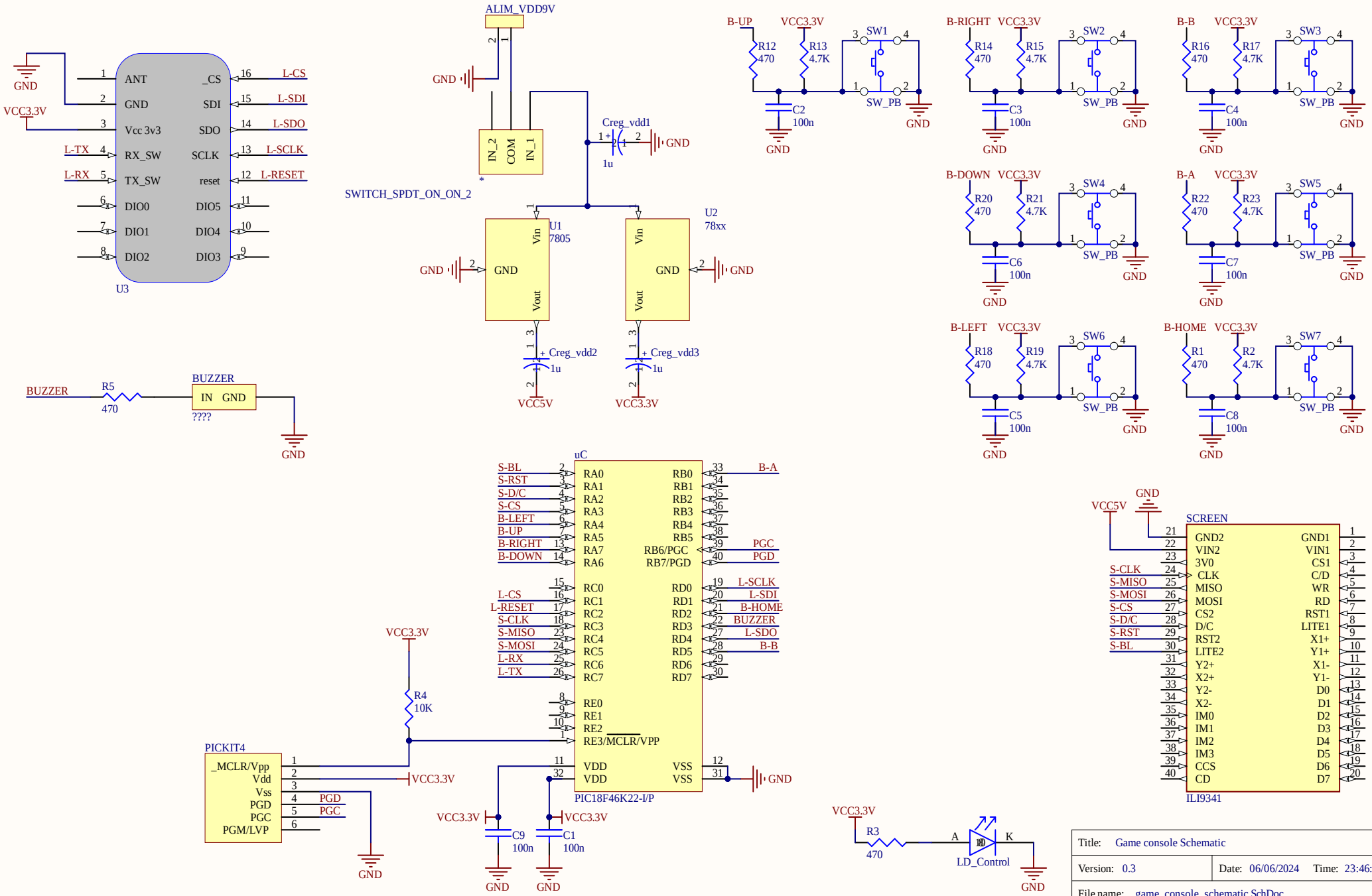
U3
ANT
GND
Vcc 3v3
RX_SW
TX_SW
DIO0
DIO1
DIO2
_CS
SDI
SDO
SCLK
reset
DIO5
DIO4
DIO3
L-CS
L-SDI
L-SDO
L-SCLK
L-RESET
L-TX
L-RX
VCC3.3V
GND
ALIM_VDD9V
IN_2
COM
IN_1
SWITCH_SPDT_ON_ON_2
Creg_vdd1
1u
U1
7805
Vin
Vout
U2
78xx
Creg_vdd2
Creg_vdd3
VCC5V
VCC3.3V
BUZZER
R5
470
IN GND
????
B-UP
B-RIGHT
B-B
B-DOWN
B-A
B-LEFT
B-HOME
R12 470
R13 4.7K
R14 470
R15 4.7K
R16 470
R17 4.7K
R20 470
R21 4.7K
R22 470
R23 4.7K
R18 470
R19 4.7K
R1 470
R2 4.7K
C2 100n
C3 100n
C4 100n
C6 100n
C7 100n
C5 100n
C8 100n
SW1
SW2
SW3
SW4
SW5
SW6
SW7
SW_PB
uC
PIC18F46K22-I/P
RA0
RA1
RA2
RA3
RA4
RA5
RA7
RA6
RC0
RC1
RC2
RC3
RC4
RC5
RC6
RC7
RE0
RE1
RE2
RE3/MCLR/VPP
VDD
VDD
RB0
RB1
RB2
RB3
RB4
RB5
RB6/PGC
RB7/PGD
RD0
RD1
RD2
RD3
RD4
RD5
RD6
RD7
VSS
VSS
S-BL
S-RST
S-D/C
S-CS
B-LEFT
B-UP
B-RIGHT
B-DOWN
L-CS
L-RESET
S-CLK
S-MISO
S-MOSI
L-RX
L-TX
B-A
PGC
PGD
L-SCLK
L-SDI
B-HOME
BUZZER
L-SDO
B-B
R4
10K
PICKIT4
_MCLR/Vpp
Vdd
Vss
PGD
PGC
PGM/LVP
C9 100n
C1 100n
SCREEN
ILI9341
GND2
VIN2
3V0
CLK
MISO
MOSI
CS2
D/C
RST2
LITE2
Y2+
X2+
Y2-
X2-
IM0
IM1
IM2
IM3
CCS
CD
GND1
VIN1
CS1
C/D
WR
RD
RST1
LITE1
X1+
Y1+
X1-
Y1-
D0
D1
D2
D3
D4
D5
D6
D7
R3
470
LD_Control
A
K
Title: Game console Schematic
Version: 0.3
Date: 06/06/2024
Time: 23:46:36
File name: game_console_schematic.SchDoc