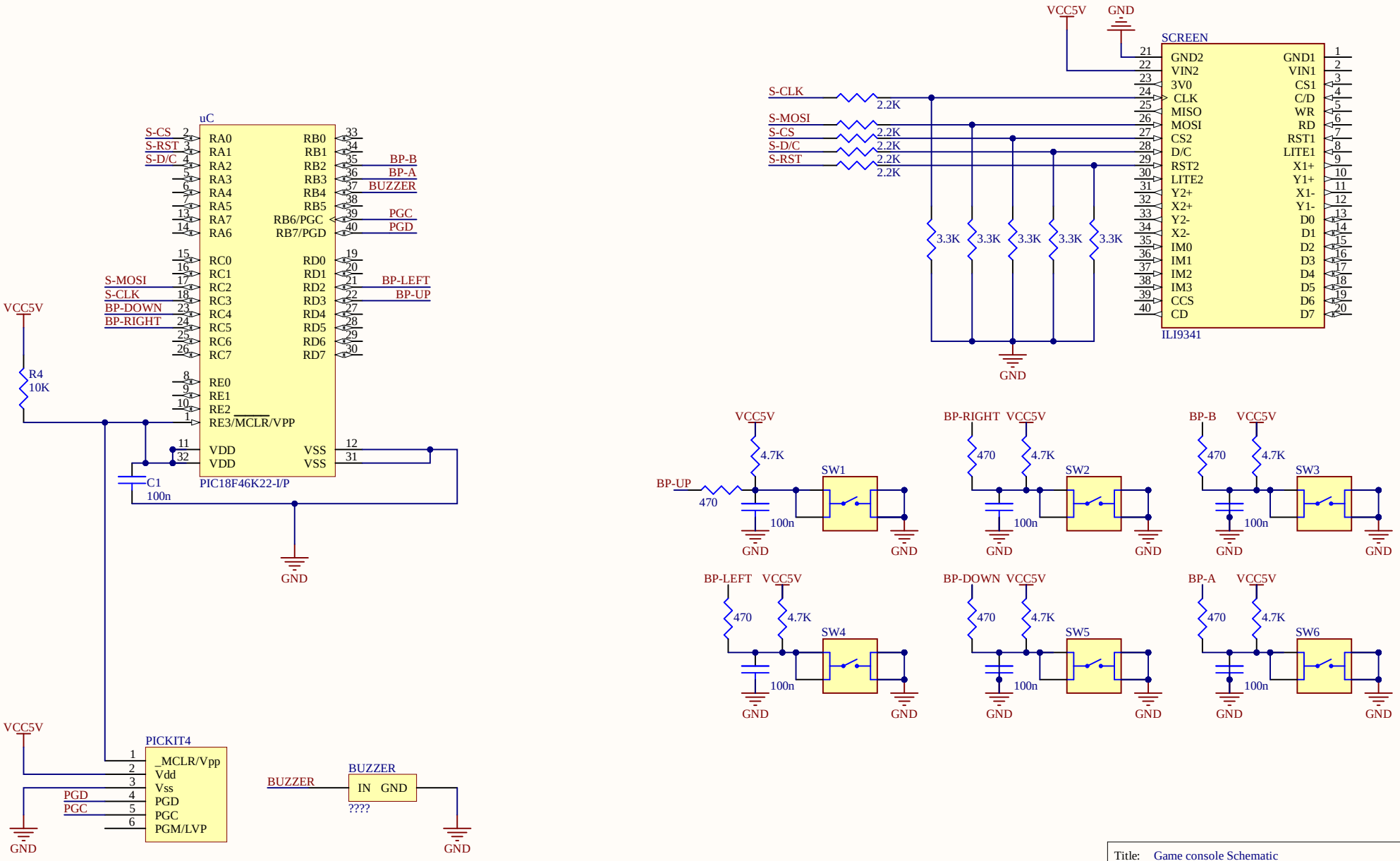

Title: Game console Schematic	
Version: 1.1	Date: 29/05/2024 Time: 16:57:00
File name: game_console_schematic.SchDoc	