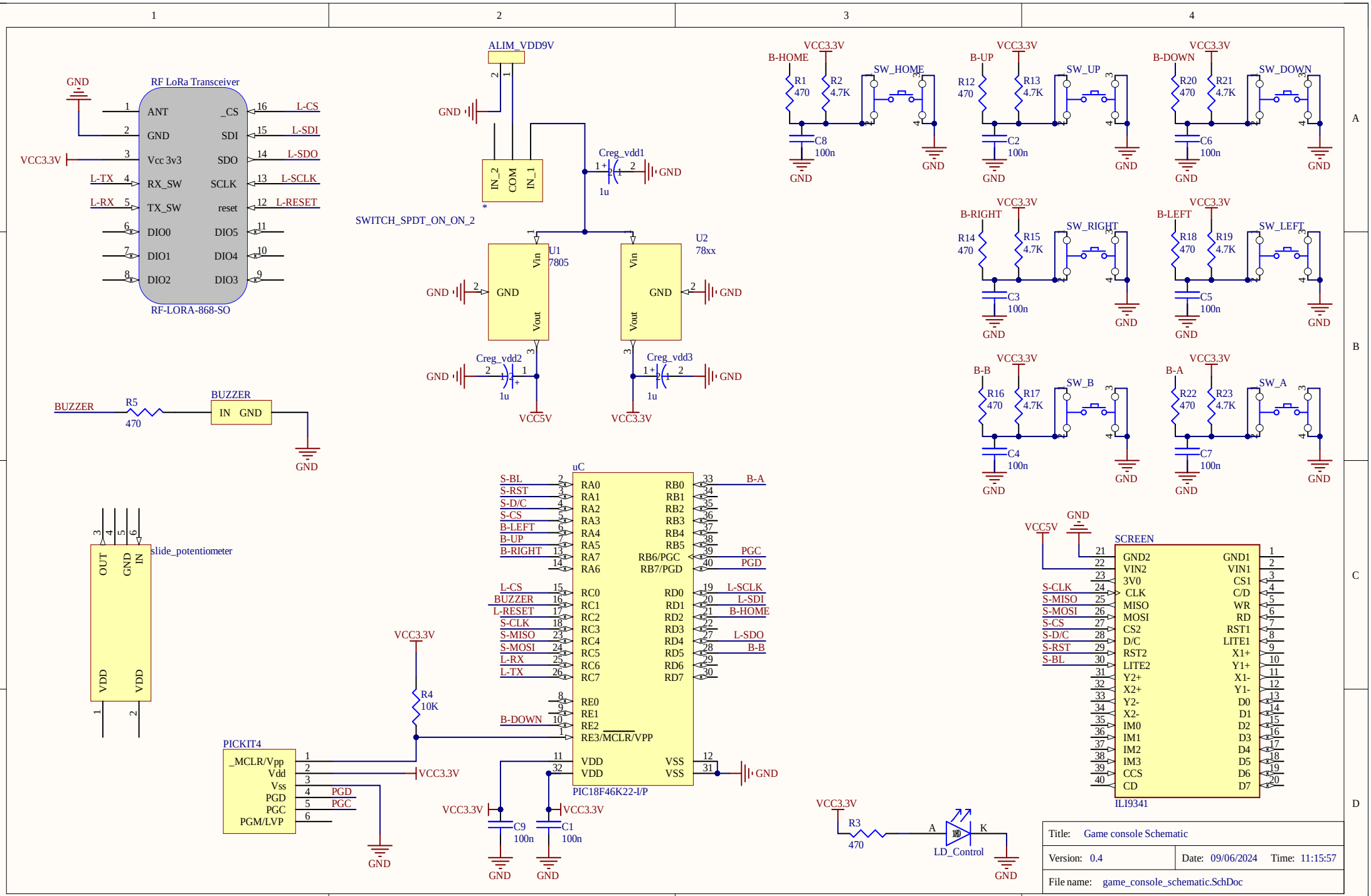
RF LoRa Transceiver
RF-LORA-868-SO
ANT
GND
Vcc 3v3
RX_SW
TX_SW
DIO0
DIO1
DIO2
_CS
SDI
SDO
SCLK
reset
DIO5
DIO4
DIO3
L-CS
L-SDI
L-SDO
L-SCLK
L-RESET
L-TX
L-RX
VCC3.3V
GND
ALIM_VDD9V
IN_2
COM
IN_1
SWITCH_SPDT_ON_ON_2
Creg_vdd1
1u
U1
7805
U2
78xx
Vin
Vout
Creg_vdd2
Creg_vdd3
VCC5V
BUZZER
R5
470
IN
B-HOME
B-UP
B-DOWN
B-RIGHT
B-LEFT
B-B
B-A
R1
R2
R12
R13
R20
R21
R14
R15
R18
R19
R16
R17
R22
R23
4.7K
C8
C2
C6
C3
C5
C4
C7
100n
SW_HOME
SW_UP
SW_DOWN
SW_RIGHT
SW_LEFT
SW_B
SW_A
slide_potentiometer
OUT
VDD
uC
PIC18F46K22-I/P
S-BL
S-RST
S-D/C
S-CS
B-LEFT
B-UP
B-RIGHT
L-CS
BUZZER
L-RESET
S-CLK
S-MISO
S-MOSI
L-RX
L-TX
B-DOWN
PGC
PGD
L-SCLK
L-SDI
B-HOME
L-SDO
B-B
B-A
RA0
RA1
RA2
RA3
RA4
RA5
RA7
RA6
RC0
RC1
RC2
RC3
RC4
RC5
RC6
RC7
RE0
RE1
RE2
RE3/MCLR/VPP
RB0
RB1
RB2
RB3
RB4
RB5
RB6/PGC
RB7/PGD
RD0
RD1
RD2
RD3
RD4
RD5
RD6
RD7
VSS
R4
10K
PICKIT4
_MCLR/Vpp
Vdd
Vss
PGD
PGC
PGM/LVP
C9
C1
SCREEN
ILI9341
GND2
VIN2
3V0
CLK
MISO
MOSI
CS2
D/C
RST2
LITE2
Y2+
X2+
Y2-
X2-
IM0
IM1
IM2
IM3
CCS
CD
GND1
VIN1
CS1
C/D
WR
RD
RST1
LITE1
X1+
Y1+
X1-
Y1-
D0
D1
D2
D3
D4
D5
D6
D7
R3
470
LD_Control
A
K
Title: Game console Schematic
Version: 0.4
Date: 09/06/2024
Time: 11:15:57
File name: game_console_schematic.SchDoc