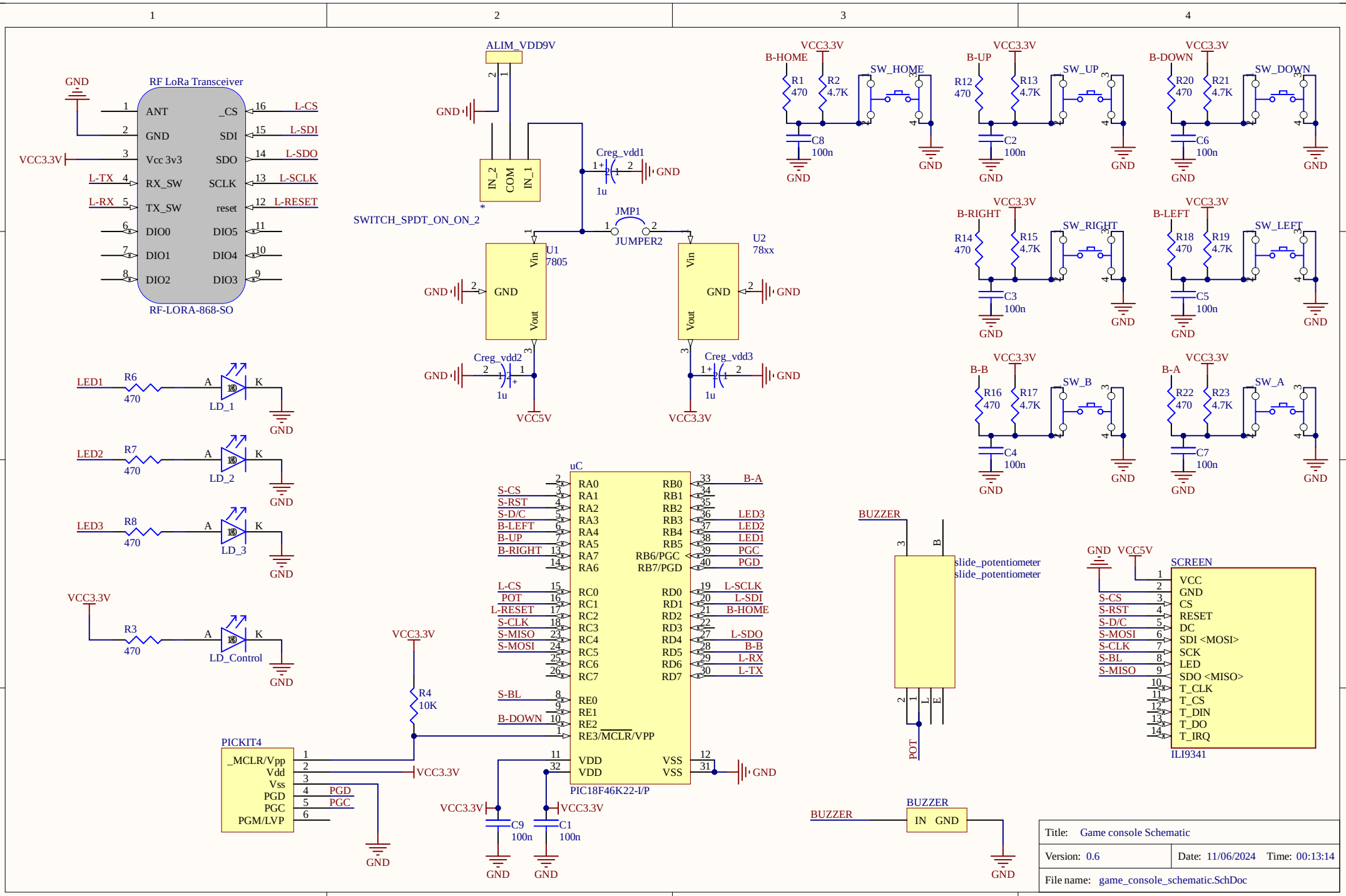
RF LoRa Transceiver
ANT
GND
Vcc 3v3
RX_SW
TX_SW
DIO0
DIO1
DIO2
_CS
SDI
SDO
SCLK
reset
DIO5
DIO4
DIO3
L-CS
L-SDI
L-SDO
L-SCLK
L-RESET
RF-LORA-868-SO
VCC3.3V
L-TX
L-RX
ALIM_VDD9V
IN_2
COM
IN_1
SWITCH_SPDT_ON_ON_2
Creg_vdd1
1u
JMP1
JUMPER2
U1
7805
Vin
Vout
U2
78xx
Creg_vdd2
Creg_vdd3
VCC5V
B-HOME
SW_HOME
R1 470
R2 4.7K
C8 100n
B-UP
SW_UP
R12 470
R13 4.7K
C2 100n
B-DOWN
SW_DOWN
R20 470
R21 4.7K
C6 100n
B-RIGHT
SW_RIGHT
R14 470
R15 4.7K
C3 100n
B-LEFT
SW_LEFT
R18 470
R19 4.7K
C5 100n
B-B
SW_B
R16 470
R17 4.7K
C4 100n
B-A
SW_A
R22 470
R23 4.7K
C7 100n
LED1
R6 470
LD_1
LED2
R7 470
LD_2
LED3
R8 470
LD_3
R3 470
LD_Control
uC
RA0
RA1
RA2
RA3
RA4
RA5
RA7
RA6
RC0
RC1
RC2
RC3
RC4
RC5
RC6
RC7
RE0
RE1
RE2
RE3/MCLR/VPP
VDD
VDD
RB0
RB1
RB2
RB3
RB4
RB5
RB6/PGC
RB7/PGD
RD0
RD1
RD2
RD3
RD4
RD5
RD6
RD7
VSS
VSS
S-CS
S-RST
S-D/C
B-LEFT
B-UP
B-RIGHT
L-CS
POT
L-RESET
S-CLK
S-MISO
S-MOSI
S-BL
B-DOWN
B-A
LED3
LED2
LED1
PGC
PGD
L-SCLK
L-SDI
B-HOME
L-SDO
B-B
L-RX
L-TX
PIC18F46K22-I/P
R4 10K
C9 100n
C1 100n
PICKIT4
_MCLR/Vpp
Vdd
Vss
PGD
PGC
PGM/LVP
BUZZER
slide_potentiometer
slide_potentiometer
SCREEN
VCC
GND
CS
RESET
DC
SDI <MOSI>
SCK
LED
SDO <MISO>
T_CLK
T_CS
T_DIN
T_DO
T_IRQ
ILI9341
IN GND
Title: Game console Schematic
Version: 0.6
Date: 11/06/2024 Time: 00:13:14
File name: game_console_schematic.SchDoc