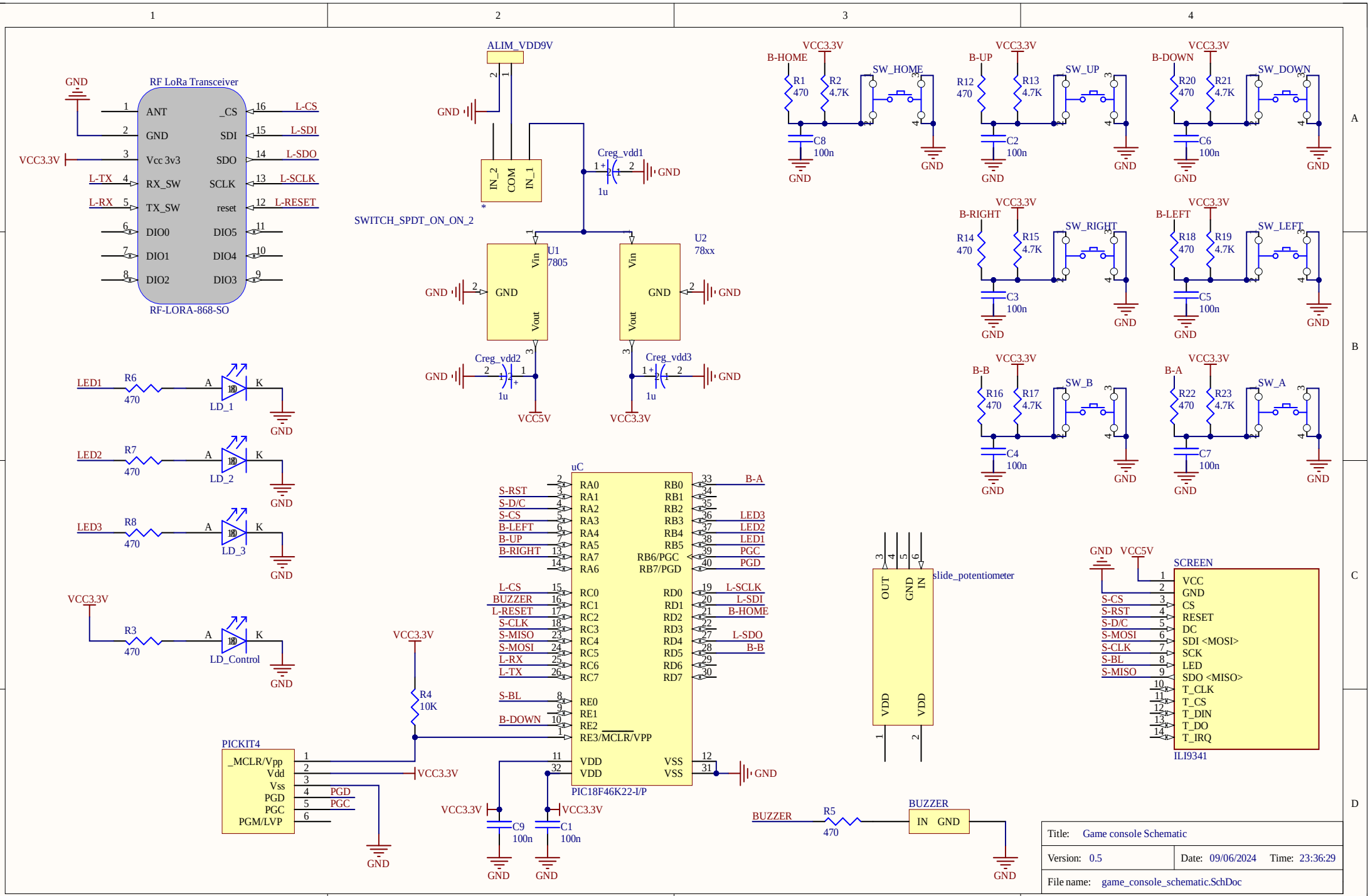
RF LoRa Transceiver
ANT
GND
Vcc 3v3
RX_SW
TX_SW
DIO0
DIO1
DIO2
_CS
SDI
SDO
SCLK
reset
DIO5
DIO4
DIO3
L-CS
L-SDI
L-SDO
L-SCLK
L-RESET
L-TX
L-RX
VCC3.3V
RF-LORA-868-SO
ALIM_VDD9V
IN_2
COM
IN_1
SWITCH_SPDT_ON_ON_2
Creg_vdd1
1u
U1
7805
Vin
Vout
U2
78xx
Creg_vdd2
Creg_vdd3
VCC5V
LED1
LED2
LED3
R6
R7
R8
R3
470
LD_1
LD_2
LD_3
LD_Control
B-HOME
B-UP
B-DOWN
B-RIGHT
B-LEFT
B-B
B-A
SW_HOME
SW_UP
SW_DOWN
SW_RIGHT
SW_LEFT
SW_B
SW_A
R1
R2
R12
R13
R20
R21
R14
R15
R18
R19
R16
R17
R22
R23
4.7K
C8
C2
C6
C3
C5
C4
C7
100n
uC
PIC18F46K22-I/P
RA0
RA1
RA2
RA3
RA4
RA5
RA7
RA6
RC0
RC1
RC2
RC3
RC4
RC5
RC6
RC7
RE0
RE1
RE2
RE3/MCLR/VPP
VDD
VSS
RB0
RB1
RB2
RB3
RB4
RB5
RB6/PGC
RB7/PGD
RD0
RD1
RD2
RD3
RD4
RD5
RD6
RD7
S-RST
S-D/C
S-CS
B-LEFT
B-UP
B-RIGHT
L-CS
BUZZER
L-RESET
S-CLK
S-MISO
S-MOSI
L-RX
L-TX
S-BL
B-DOWN
B-A
LED3
LED2
LED1
PGC
PGD
L-SCLK
L-SDI
B-HOME
L-SDO
B-B
R4
10K
PICKIT4
_MCLR/Vpp
Vdd
Vss
PGD
PGC
PGM/LVP
C9
C1
slide_potentiometer
OUT
GND
IN
VDD
SCREEN
VCC
CS
RESET
DC
SDI <MOSI>
SCK
LED
SDO <MISO>
T_CLK
T_CS
T_DIN
T_DO
T_IRQ
ILI9341
BUZZER
R5
Title: Game console Schematic
Version: 0.5
Date: 09/06/2024
Time: 23:36:29
File name: game_console_schematic.SchDoc