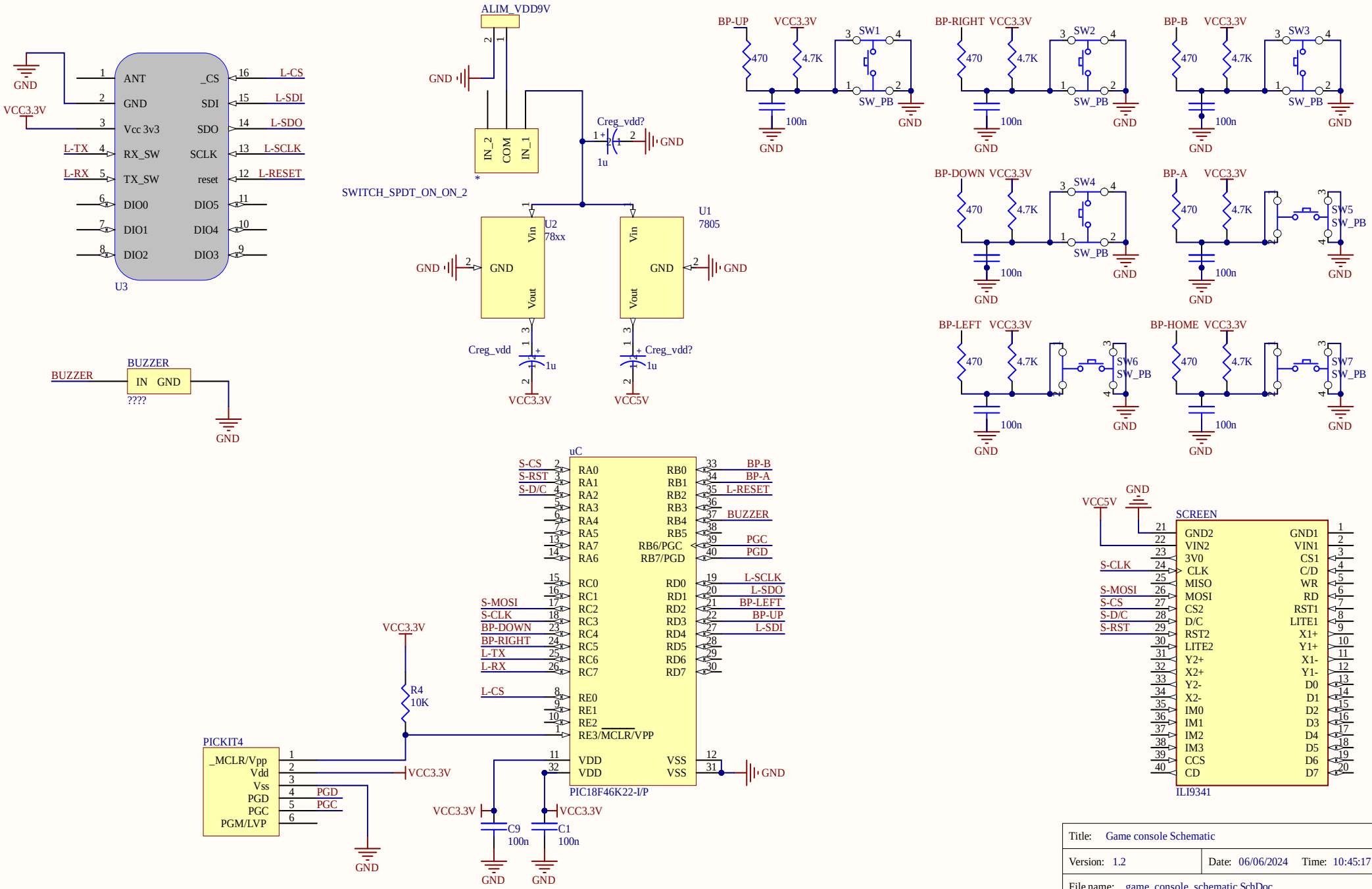

Title:	Game console Schematic
Version: 1.2	Date: 06/06/2024 Time: 10:45:17
File name:	game_console_schematic.SchDoc