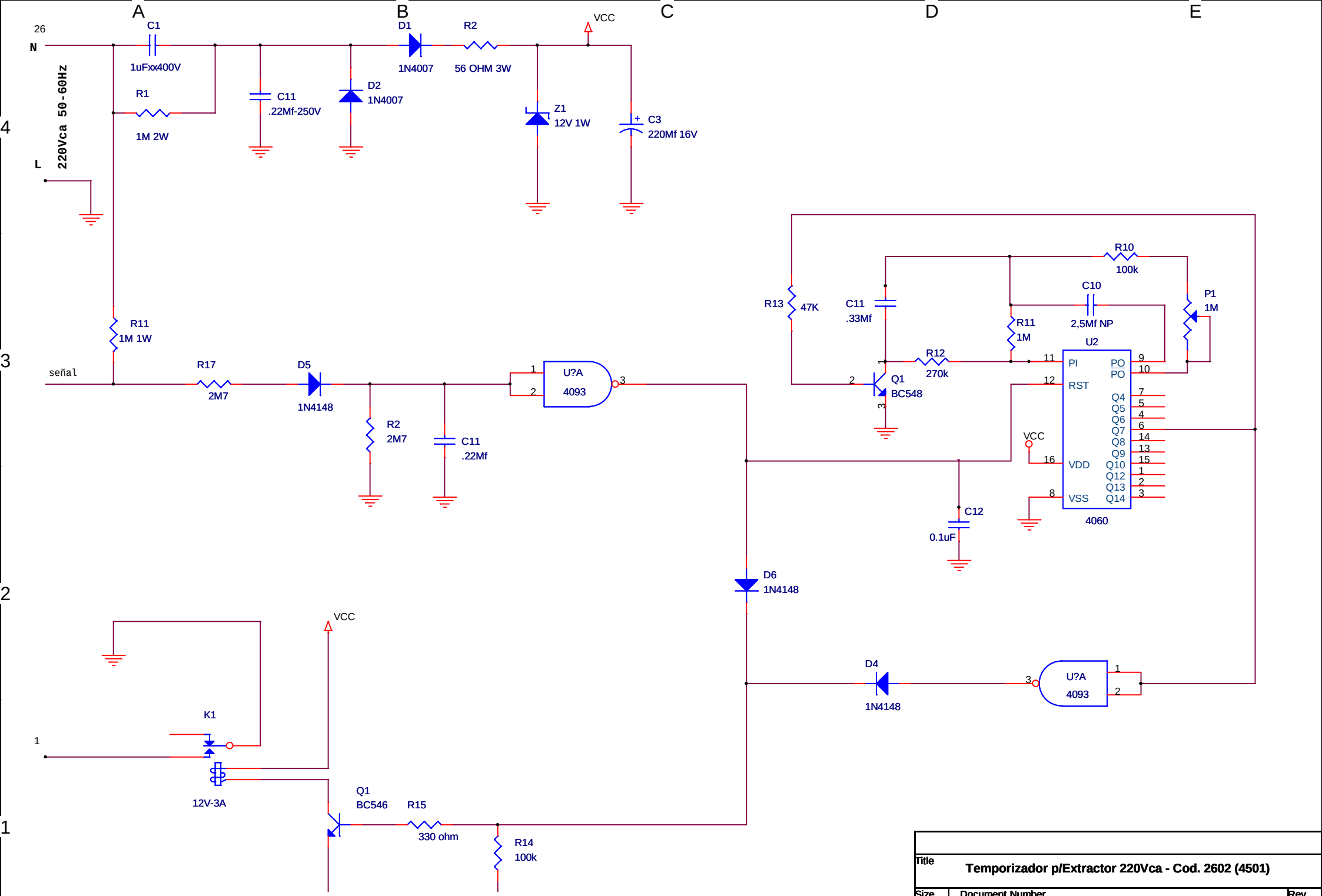

Title	Temporizador p/Extractor 220Vca - Cod. 2602 (4501)	
Size A4	Document Number <Doc>	Rev AWAK
Date: Thursday, May 17, 2012	Sheet 1 of 1	

You created this PDF from an application that is not licensed to print to novaPDF printer (http://www.novapdf.com)