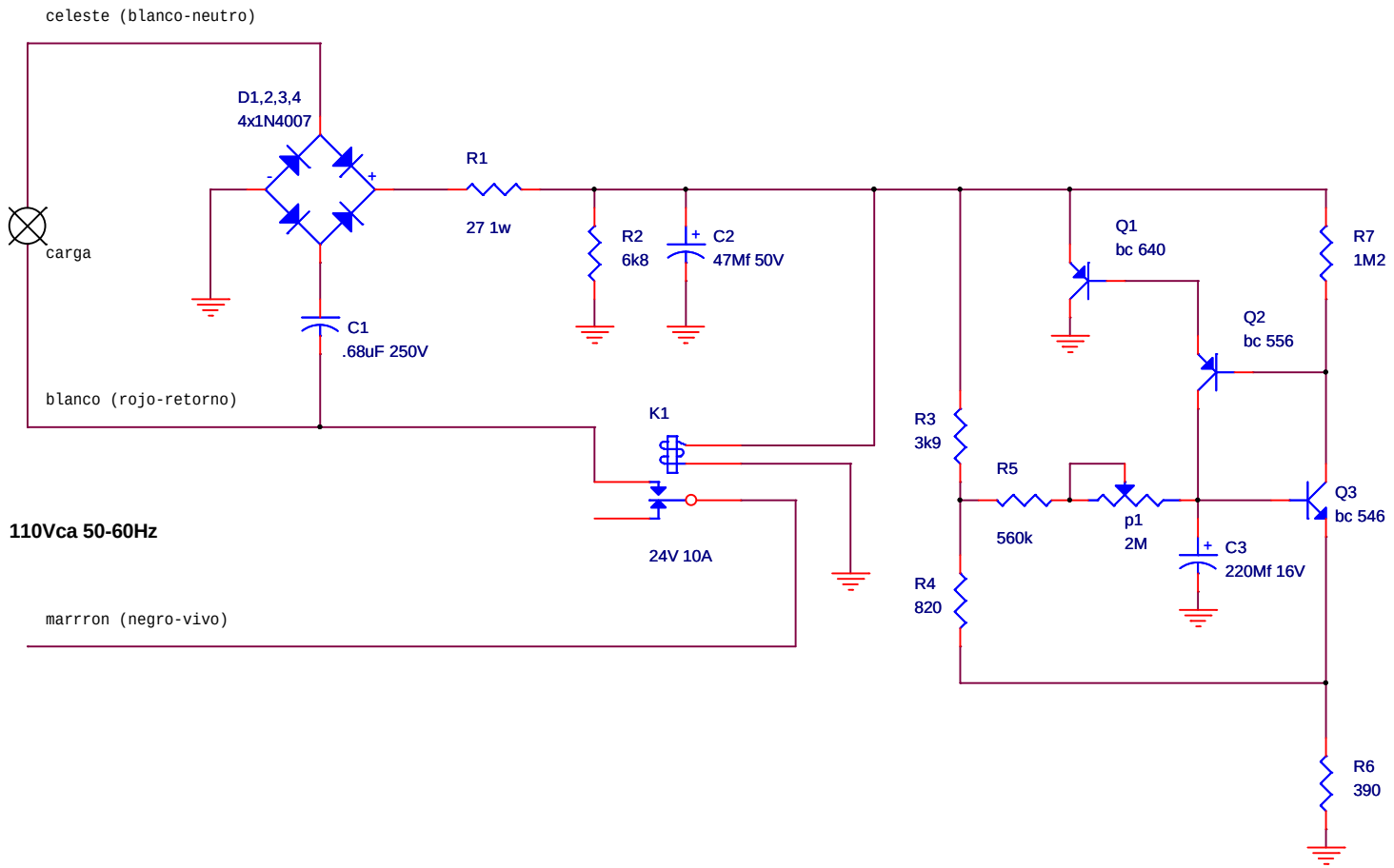

Title	**Minutero de Escalera 110Vca - Cod. 2597 (x8901)**	
Size	Document Number	Rev AWAK
Date: Thursday, May 17, 2012	Sheet 1 of 1	

You created this PDF from an application that is not licensed to print to novaPDF printer (http://www.novapdf.com)