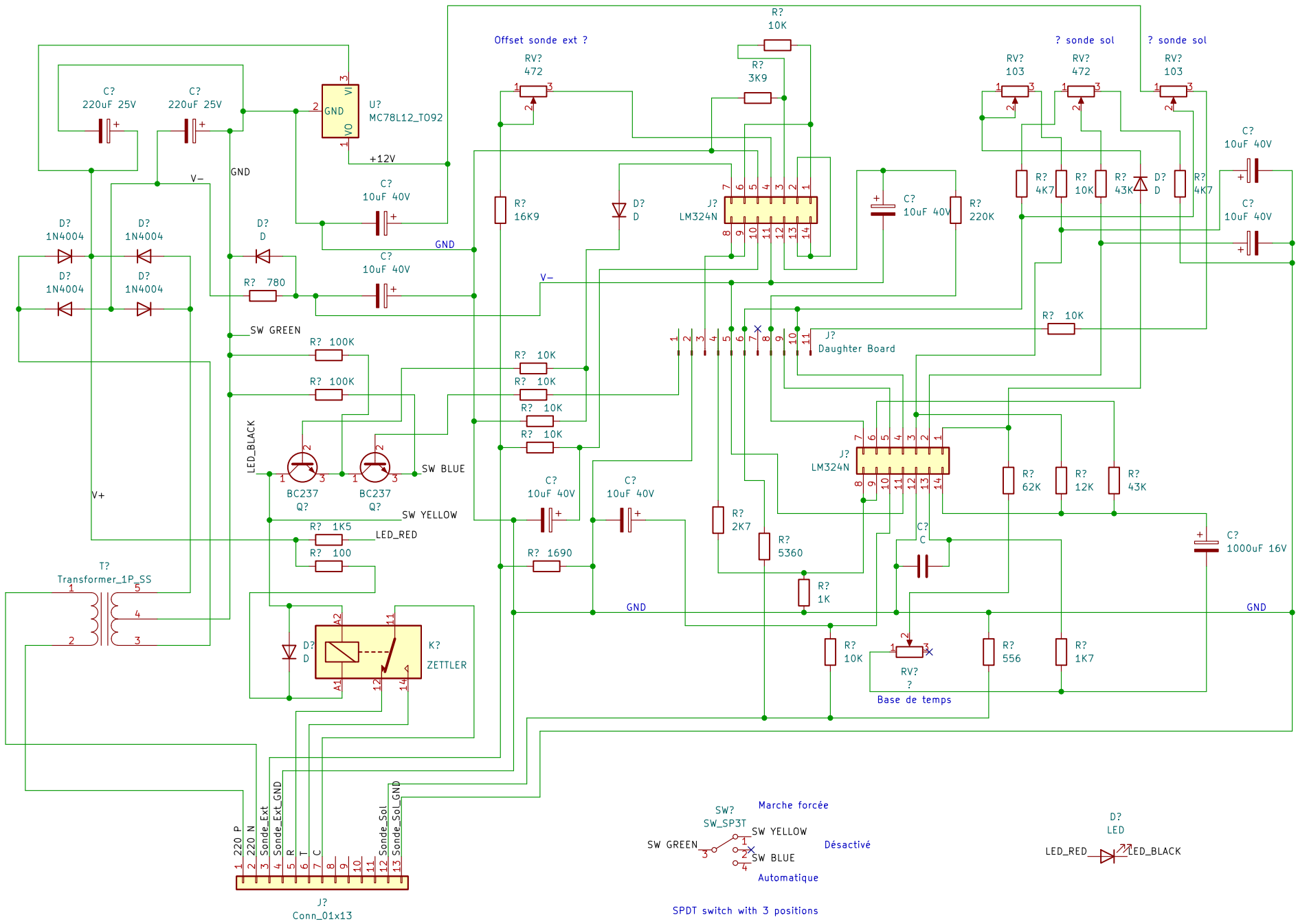

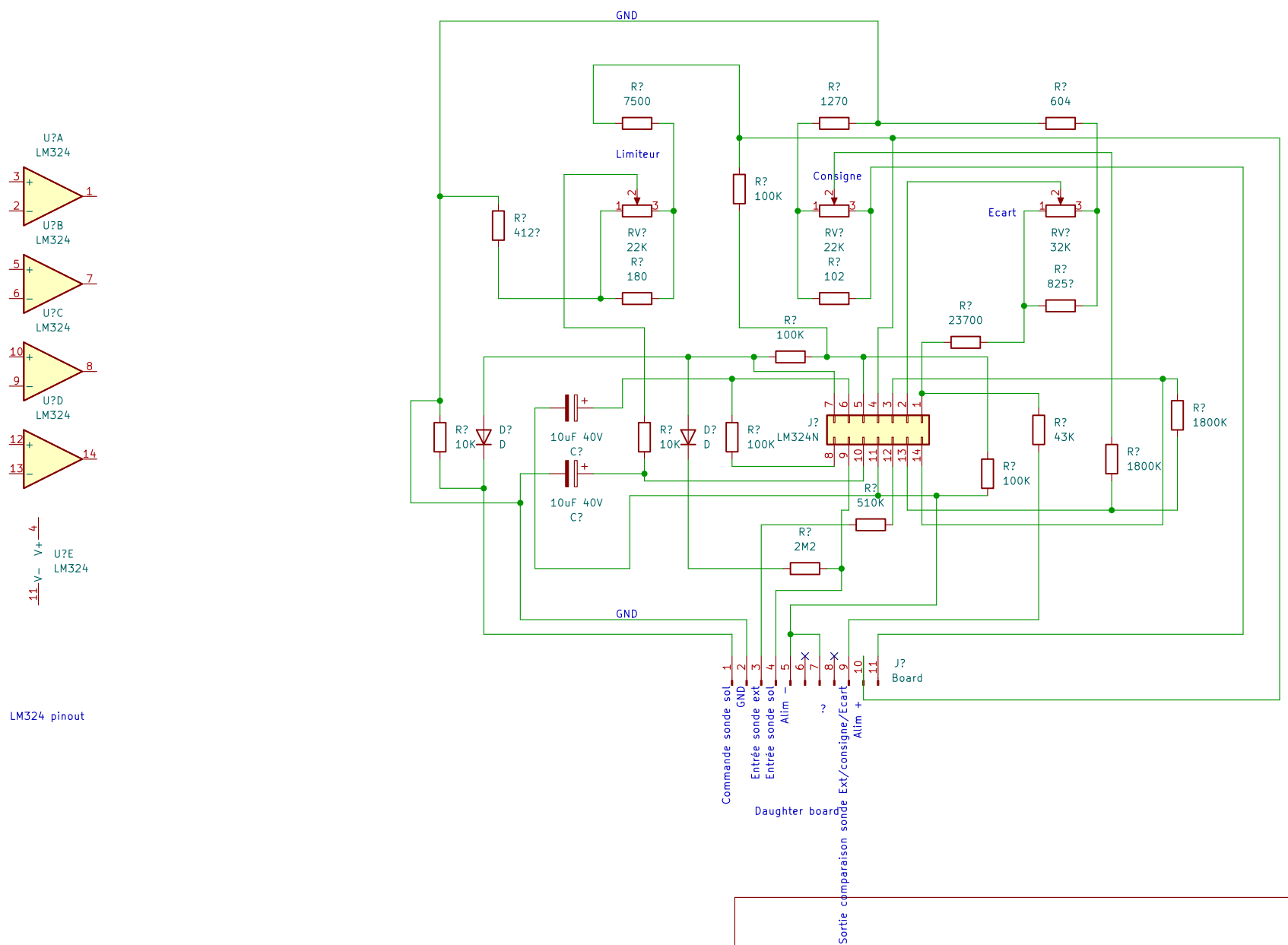

https://github.com/f1ac0/Delta55

Sheet: /
File: Delta55.kicad_sch

Title: DeltaDore Delta 55 regulateur

Size: A3	Date: 2022-04-11	Rev:
KiCad E.D.A. eeschema 6.0.4-6f826c9f35-116-ubuntu20.04.1		Id: 1/1