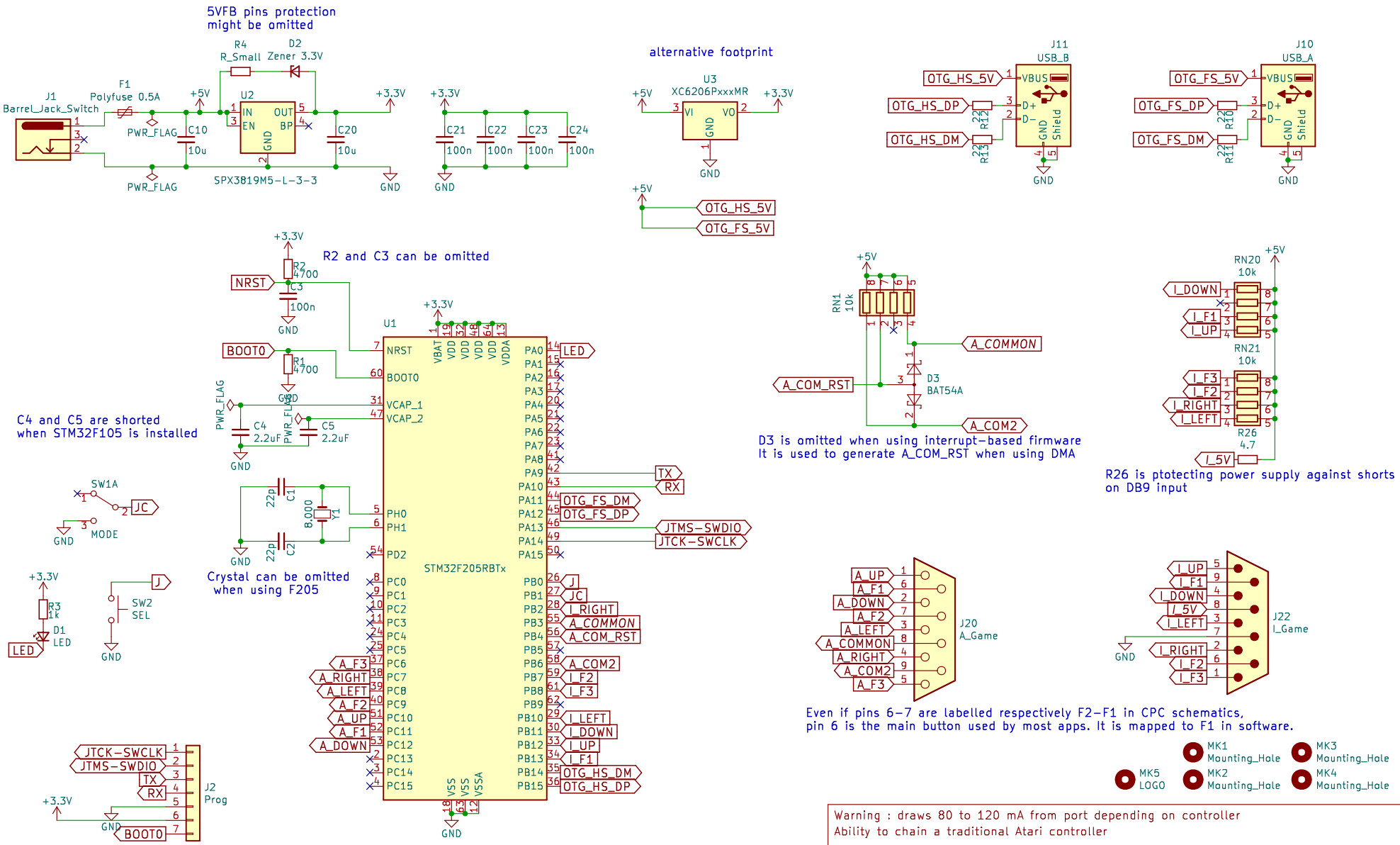

Warning : draws 80 to 120 mA from port depending on controller
Ability to chain a traditional Atari controller

Connect two USB controllers to the Amstrad CPC gameport

FLACO 2020, licence of this schematic is CC-BY-NC-SA

Sheet: /
File: Dual USB Controller adapter CPC.kicad_sch

Title: Dual USB Controller adapter CPC

Size: A4	Date: 2020-05-07	**Rev: 0.2**
KiCad E.D.A. kicad 6.0.8-f2edbf62ab~116~ubuntu22.04.1		Id: 1/1