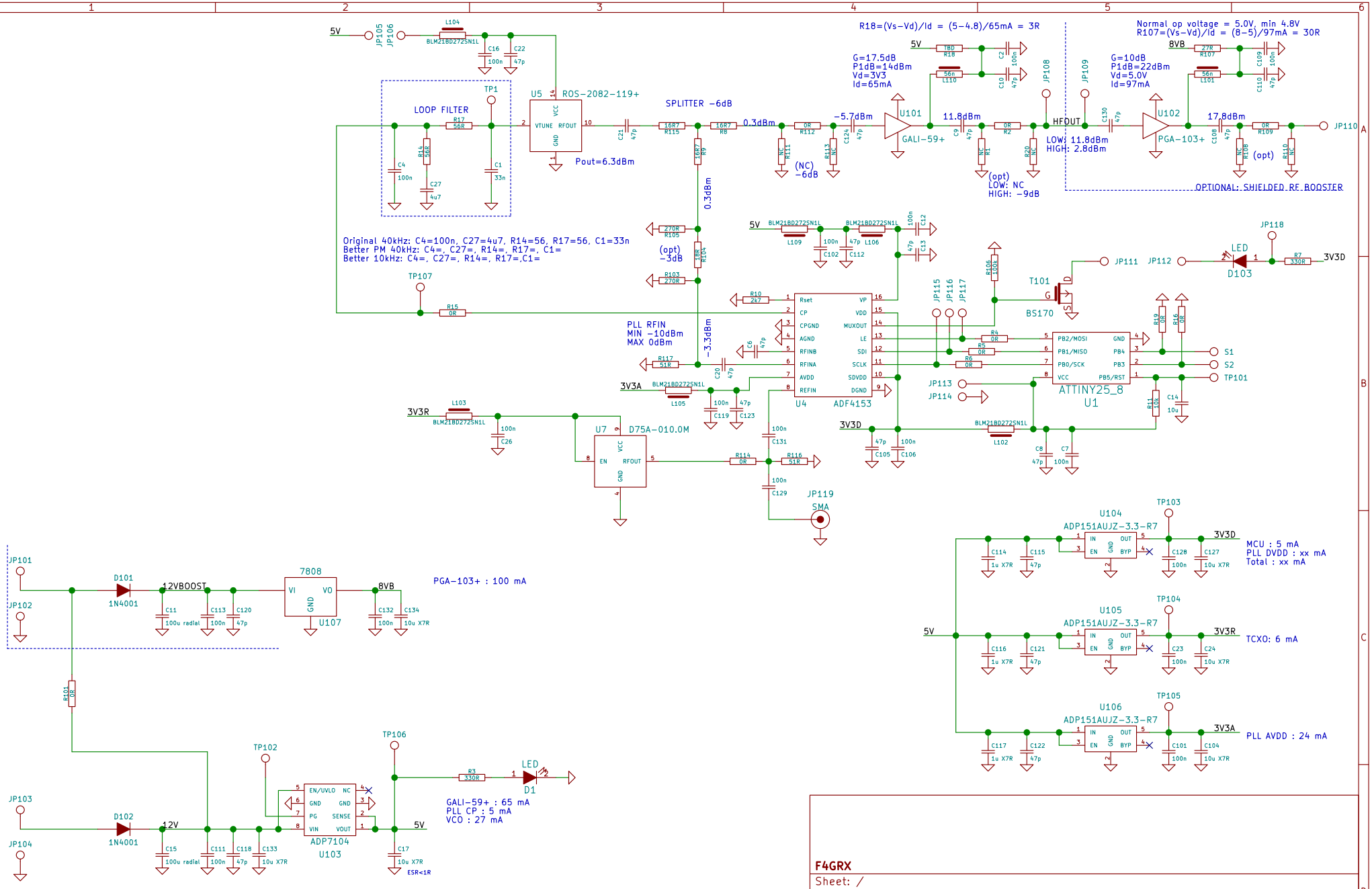

F4GRX

Sheet: /

File: grx13.sch

Title: GRX13 Local Oscillator

Size: A4	Date: 7 aug 2014	Rev: 105
KiCad E.D.A. kicad 4.0.7		Id: 1/1