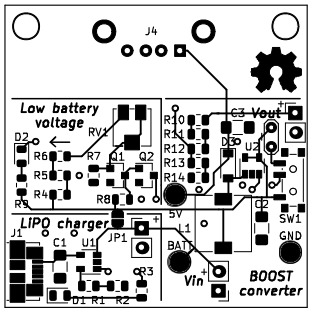

Martynas J.

Sheet:
File: 1Cell_LiPO_BOOST_converter.kicad_pcb

Title: 1 Cell LiPO BOOST converter with low Vin indication

Size: A4	Date: 2019-01-30	**Rev: A**
KiCad E.D.A. kicad 5.0.2-bee76a070ubuntu18.04.1		Id: 1/3