KiBoard

Variant: DRAFT

2026-03-18

Rev + (Unreleased)

Page	Index	Page	Index	Page	Index	Page	Index
1	Cover Page	11		21		31	
2	Block Diagram	12		22		32	
3	Project Architecture	13		23		33	
4	Section A - Title A	14		24		34	
5	Section B - Title B	15		25		35	
6	Power - Sequencing	16		26		36	
7	Revision History	17		27		37	
8		18		28		38	
9		19		29		39	
10		20		30		40	

TOP VIEW

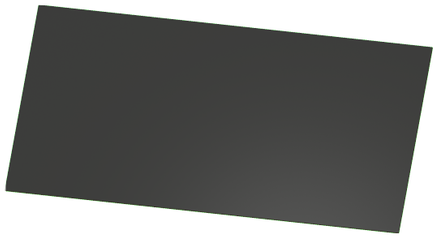

BOTTOM VIEW

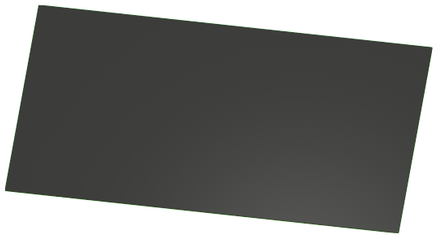

NOTES

Comment

Not fitted components are marked as ✗

DRAFT - Very early stage of schematic, ignore details.
PRELIMINARY - Close to final schematic.
CHECKED - There shouldn't be any mistakes. Contact the engineer if you find any.
RELEASED - A board with this schematic has been sent to production.

Date: 18-Mar-2026

DESIGN CONSIDERATIONS

DESIGN NOTE: Example text for informational design notes.

DESIGN NOTE: Example text for debug notes.

DESIGN NOTE: Example text for cautionary design notes.

DESIGN NOTE: Example text for critical design notes.

LAYOUT NOTE: Example text for critical layout guidelines.

Comments:	Company: Semruk		Variant: DRAFT	Git Hash: 68a27aa
	Board Name: KiBoard		Project Name: KiBot	
Sheet Title:	File Name: KiBot.kicad_sch	Designer: Fate	Date: 2025-01-12	Revision: + (Unreleased)
Sheet Path: /		Reviewer:	Size: A3	Sheet: 1 of 7

[2] Block Diagram

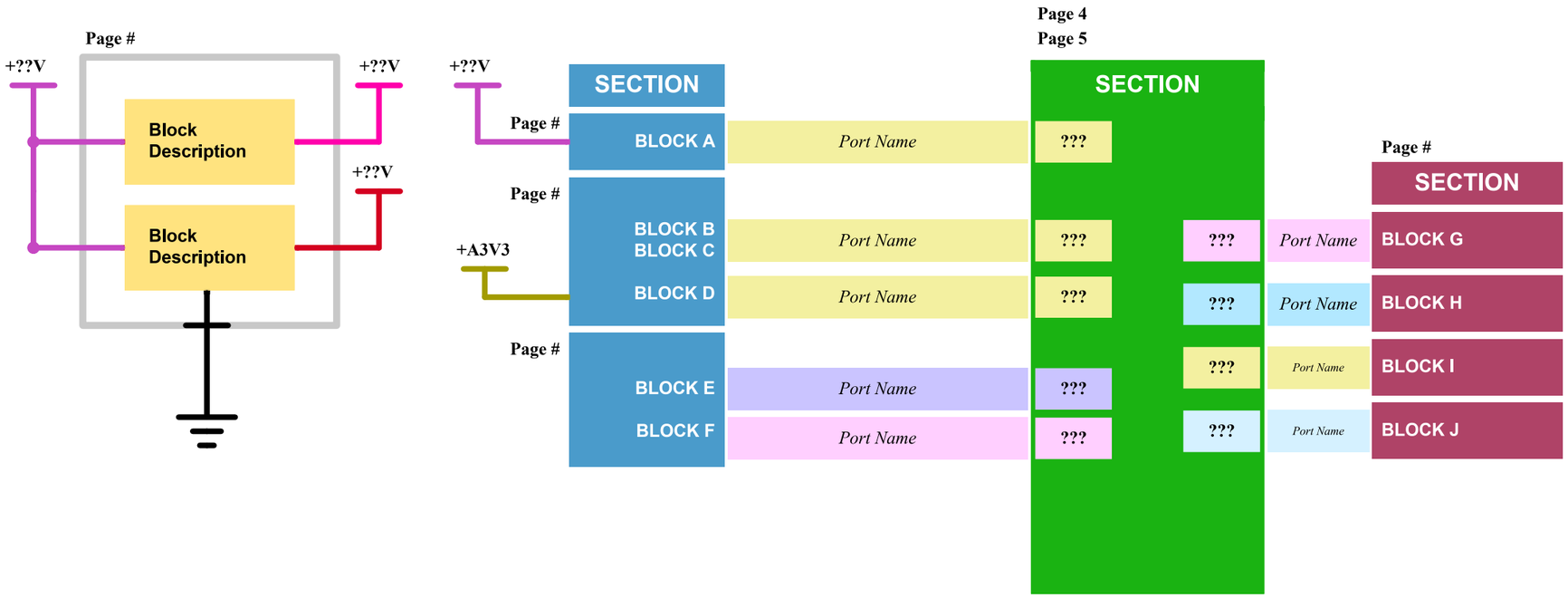

Target specifications:

Input voltage:	?? - ?? V
Spec 2	??
Spec 3	??
Spec 4	??

Comments:	Company: **Semruk**		Variant: DRAFT	Git Hash: 68a27aa
	Board Name: **KiBoard**		Project Name: **KiBot**	
Sheet Title: Block Diagram	File Name: Block Diagram.kicad_sch	Designer: Fate	Date: 2025-01-12	Revision: + (Unreleased)
Sheet Path: /Block Diagram/		Reviewer:	Size: **A3**	Sheet: **2** of **7**

[3] Project Architecture

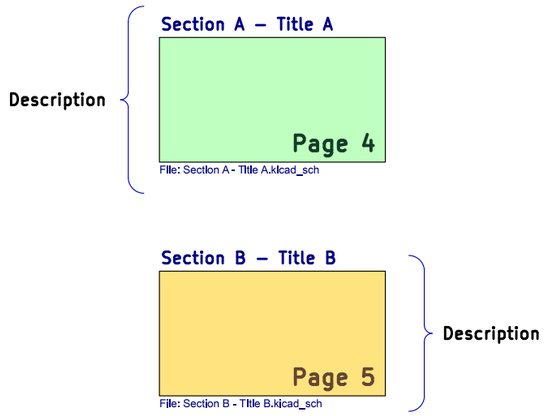

Comments:	Company: Semruk		Variant: DRAFT	Git Hash: 68a27aa
	Board Name: KiBoard		Project Name: KiBot	
Sheet Title: Project Architecture	File Name: Project Architecture.kicad_sch	Designer: Fate	Date: 2025-01-12	Revision: + (Unreleased)
Sheet Path: /Project Architecture/		Reviewer:	Size: A3	Sheet: 3 of 7

[4] Sheet Title A

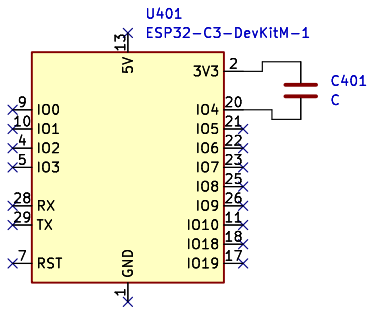

LAYOUT NOTE:
blablabla

DESIGN NOTE:
blablabla

Block Description

Comments: AN5346 STM32G474 Datasheet p.81 J. Pieper ADC investigation	Company: Semruk		Variant: DRAFT	Git Hash: 68a27aa
	Board Name: KiBoard		Project Name: KiBot	
Sheet Title: Sheet Title A	File Name: Section A - Title A.kicad_sch	Designer: Fate	Date: 2025-01-12	Revision: + (Unreleased)
Sheet Path: /Project Architecture/Section A - Title A/		Reviewer:	Size: A4	Sheet: 4 of 7

[5] Sheet Title B

Block Description

DESIGN NOTE:
blabla

DESIGN NOTE:
blabla

LAYOUT NOTE:
blabla

Block Description

Block Description

Block Description

Block Description

Block Description

Block Description

Block Description

Block Description

Block Description

Comments: **References:** Flexible I/O worked examples Flexible I/O source configuration	Company: **Semruk**		Variant: DRAFT	Git Hash: 68a27aa
	Board Name: **KiBoard**		Project Name: **KiBot**	
Sheet Title: Sheet Title B	File Name: Section B - TItle B.kicad_sch	Designer: Fate	Date: 2025-01-12	Revision: + (Unreleased)
Sheet Path: /Project Architecture/Section B - Title B/		Reviewer:	Size: **A3**	Sheet: **5** of **7**

[6] Power - Sequencing

NAME	SOURCE	LEVEL
+V??	??	? - ? ± ??%
+V??	??	? - ? ± ??%
+V??	??	? - ? ± ??%
+V??	??	? - ? ± ??%
+V??	??	? - ? ± ??%

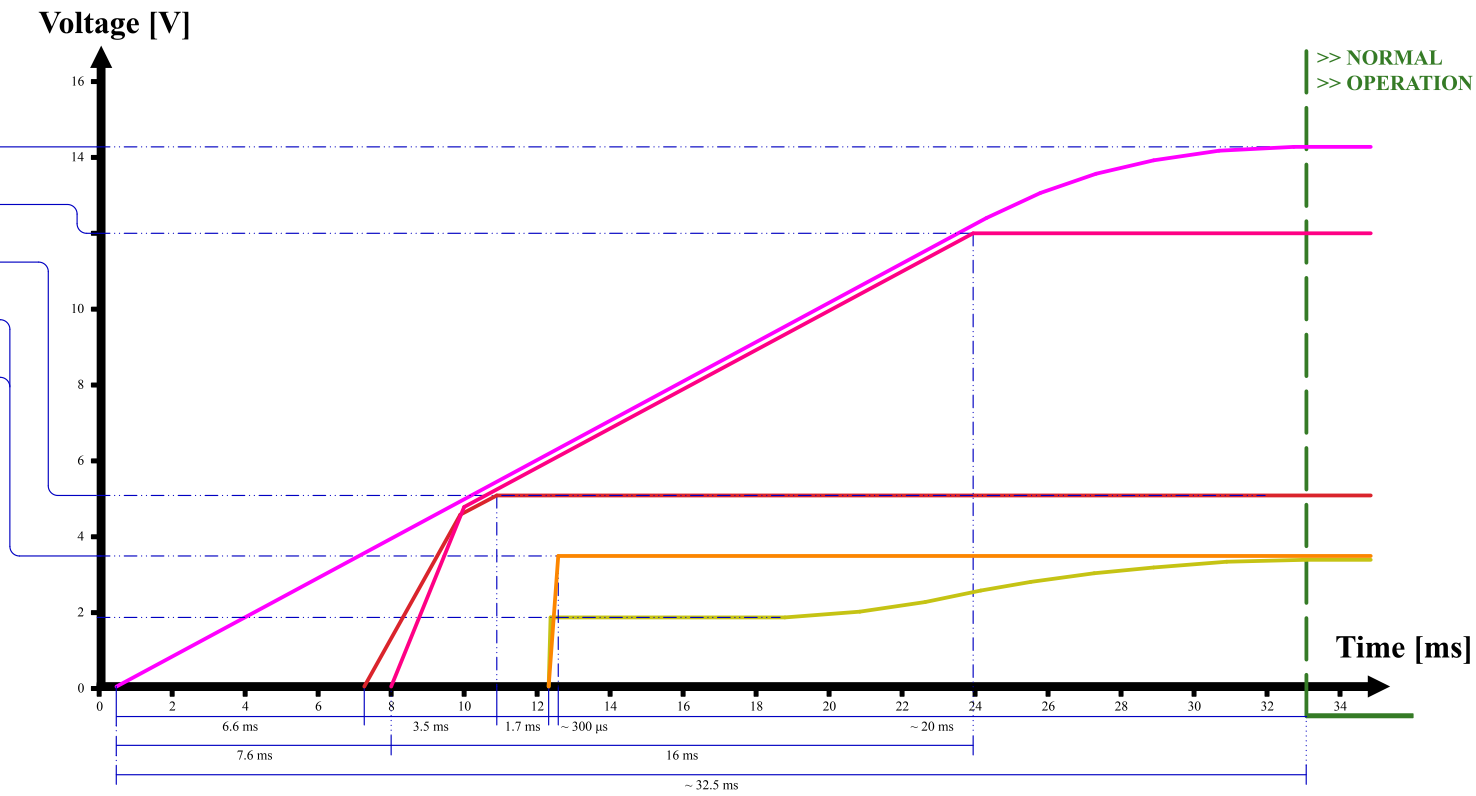

Comments:	Company: Semruk		Variant: DRAFT	Git Hash: 68a27aa
	Board Name: KiBoard		Project Name: KiBot	
Sheet Title: Power - Sequencing	File Name: Power - Sequencing.kicad_sch	Designer: Fate	Date: 2025-01-12	Revision: + (Unreleased)
Sheet Path: /Power - Sequencing/		Reviewer:	Size: A4	Sheet: 6 of 7

[7] Revision History

Comments:	Company: Semruk		Variant: DRAFT	Git Hash: 68a27aa
	Board Name: KiBoard		Project Name: KiBot	
Sheet Title: Revision History	File Name: Revision History.kicad_sch	Designer: Fate	Date: 2025-01-12	Revision: + (Unreleased)
Sheet Path: /Revision History/		Reviewer:	Size: A4	Sheet: 7 of 7