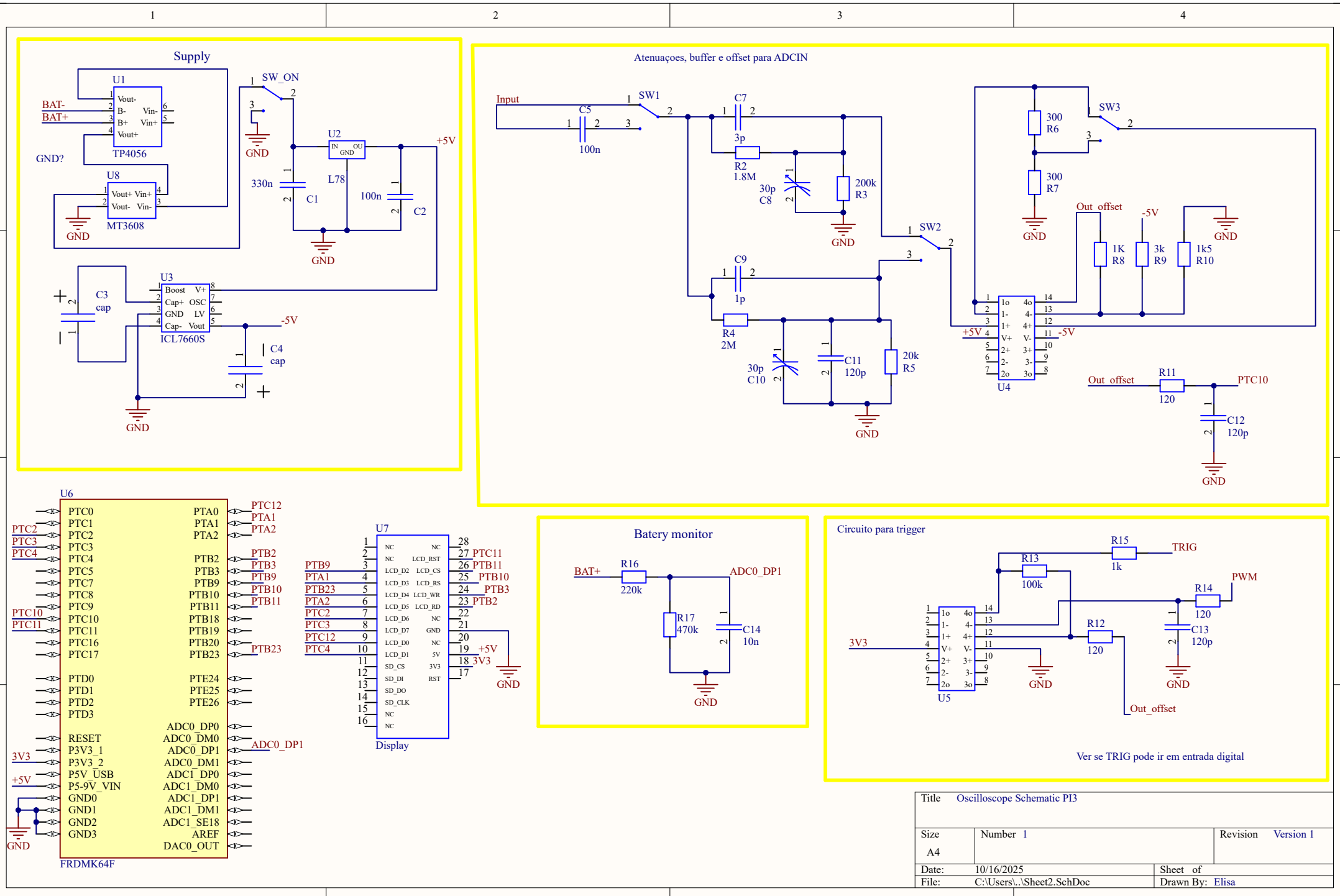
Supply
U1
TP4056
BAT-
BAT+
GND?
U8
MT3608
SW_ON
GND
U2
L78
330n
C1
100n
C2
+5V
U3
ICL7660S
C3
cap
C4
cap
-5V
Atenuaçoes, buffer e offset para ADCIN
Input
C5
100n
SW1
C7
3p
R2
1.8M
30p
C8
200k
R3
C9
1p
R4
2M
30p
C10
C11
120p
20k
R5
SW2
300
R6
300
R7
SW3
Out_offset
1K
R8
3k
R9
1k5
R10
U4
R11
120
PTC10
C12
120p
U6
FRDMK64F
PTC0
PTC1
PTC2
PTC3
PTC4
PTC5
PTC7
PTC8
PTC9
PTC10
PTC11
PTC16
PTC17
PTD0
PTD1
PTD2
PTD3
RESET
P3V3_1
P3V3_2
P5V_USB
P5-9V_VIN
GND0
GND1
GND2
GND3
PTA0
PTA1
PTA2
PTB2
PTB3
PTB9
PTB10
PTB11
PTB18
PTB19
PTB20
PTB23
PTE24
PTE25
PTE26
ADC0_DP0
ADC0_DM0
ADC0_DP1
ADC0_DM1
ADC1_DP0
ADC1_DM0
ADC1_DP1
ADC1_DM1
ADC1_SE18
AREF
DAC0_OUT
3V3
U7
Display
Batery monitor
BAT+
R16
220k
R17
470k
C14
10n
ADC0_DP1
Circuito para trigger
R15
1k
TRIG
R13
100k
R14
120
PWM
R12
120
C13
120p
U5
Out_offset
Ver se TRIG pode ir em entrada digital
Title Oscilloscope Schematic PI3
Size A4
Number 1
Revision Version 1
Date: 10/16/2025
Sheet of
File: C:\Users\..\Sheet2.SchDoc
Drawn By: Elisa