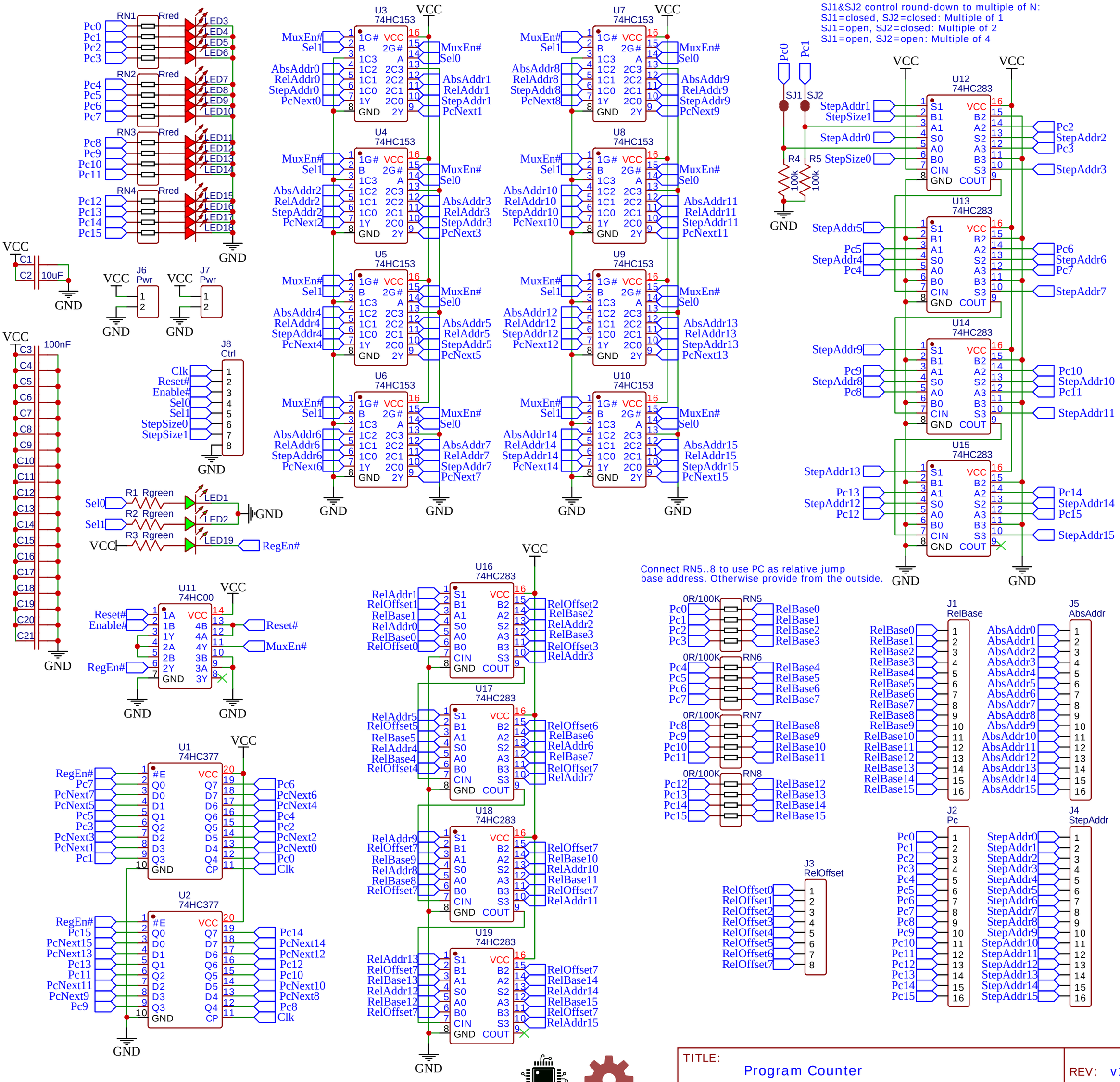

TITLE: Program Counter	REV: v1
Company: Your Company	Sheet: 1/1
Date: 2022-03-03 Drawn By: Fabian Schuiki	