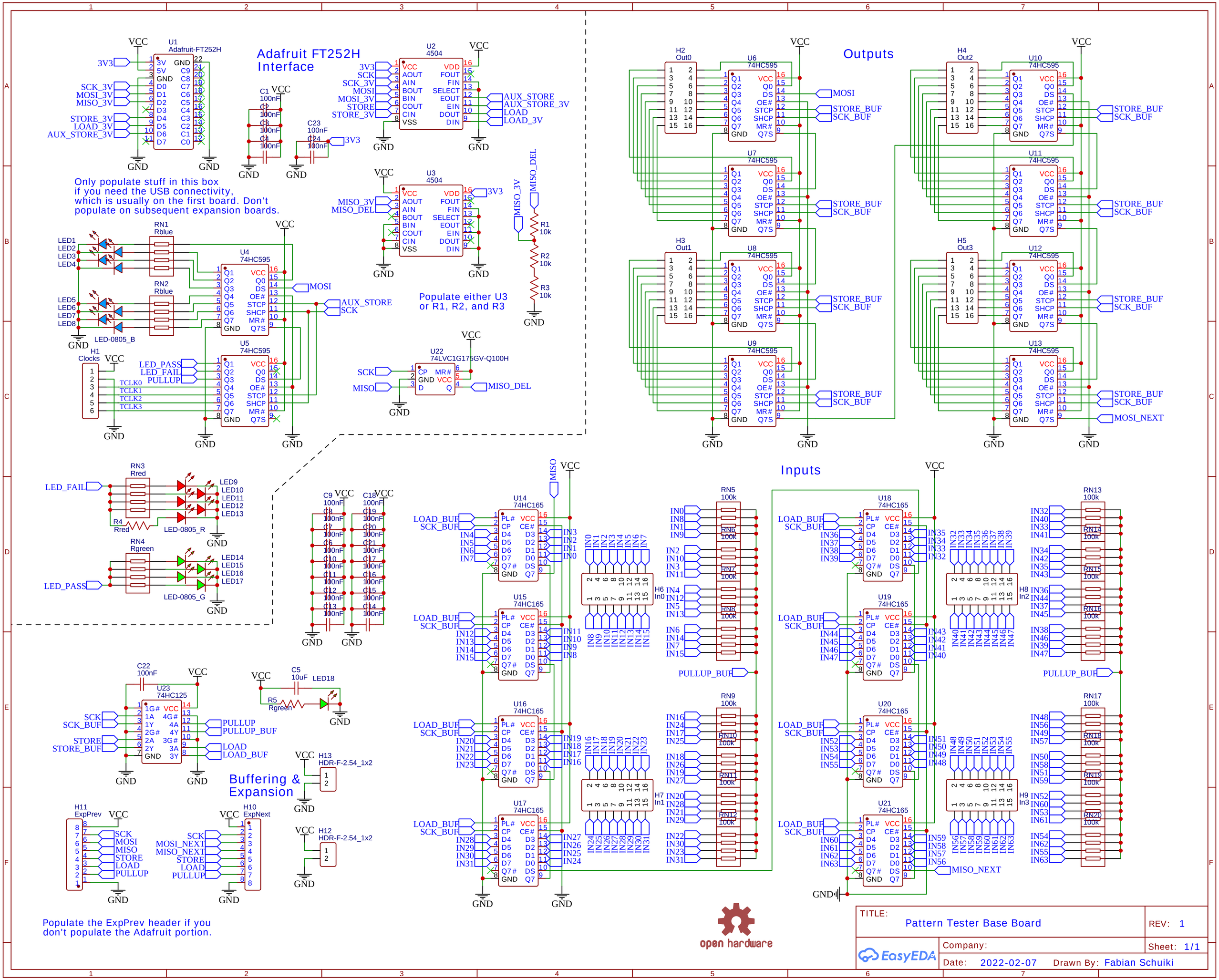
Adafruit FT252H Interface
Only populate stuff in this box if you need the USB connectivity, which is usually on the first board. Don't populate on subsequent expansion boards.
Populate either U3 or R1, R2, and R3
Outputs
Inputs
Buffering & Expansion
Populate the ExpPrev header if you don't populate the Adafruit portion.
open hardware
TITLE:
Pattern Tester Base Board
REV: 1
Company:
Sheet: 1/1
Date: 2022-02-07
Drawn By: Fabian Schuiki
EasyEDA