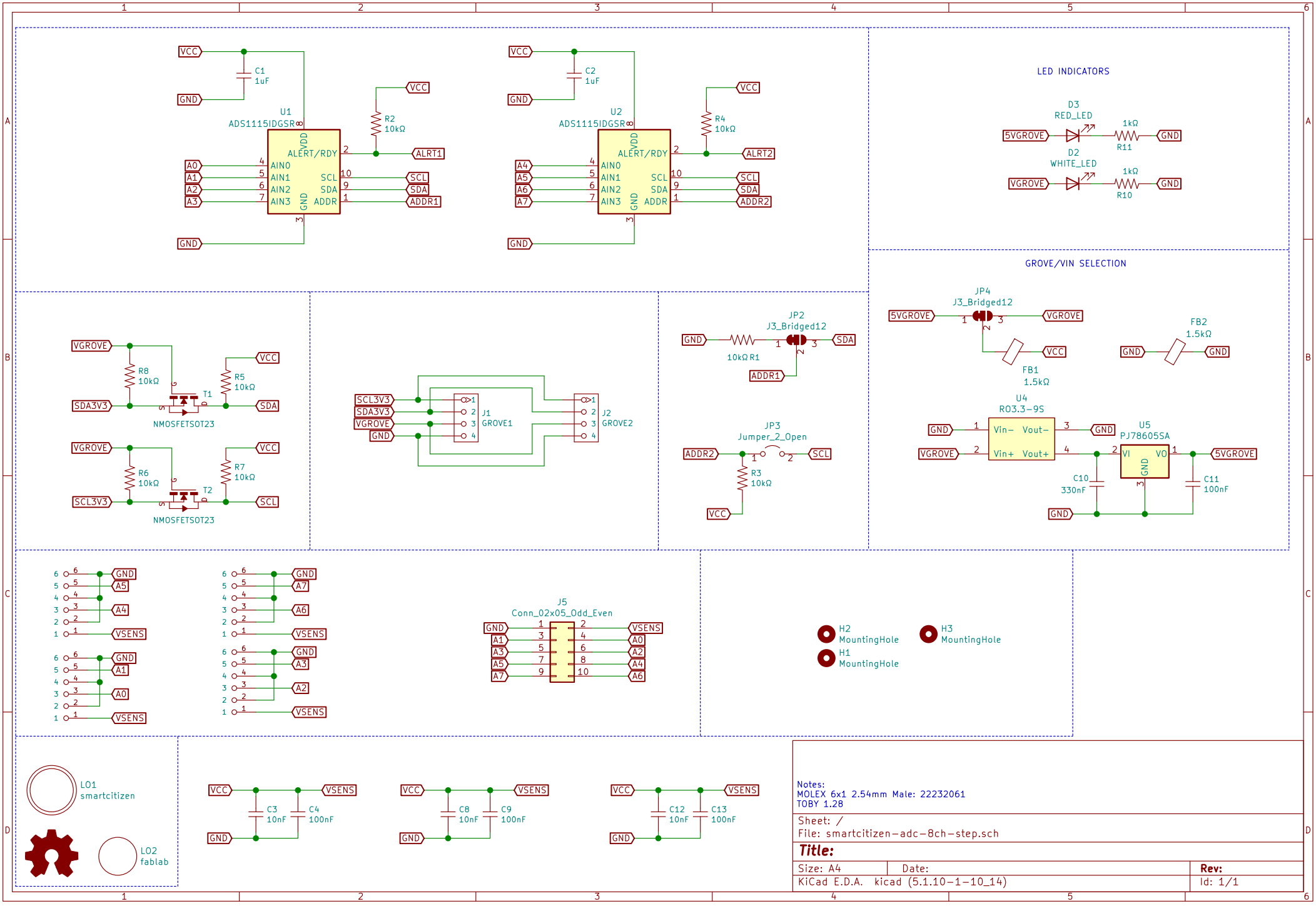
U1
ADS1115IDGSR
C1
1uF
R2
10kΩ
ALRT1
SCL
SDA
ADDR1
A0
A1
A2
A3
U2
ADS1115IDGSR
C2
1uF
R4
10kΩ
ALRT2
ADDR2
A4
A5
A6
A7
LED INDICATORS
D3
RED_LED
D2
WHITE_LED
R11
1kΩ
R10
1kΩ
5VGROVE
VGROVE
GROVE/VIN SELECTION
JP4
J3_Bridged12
FB1
1.5kΩ
FB2
1.5kΩ
U4
RO3.3-9S
Vin-
Vout-
Vin+
Vout+
U5
PJ78605SA
VI
VO
C10
330nF
C11
100nF
R8
10kΩ
R5
10kΩ
T1
NMOSFETSOT23
R6
10kΩ
R7
10kΩ
T2
SDA3V3
SCL3V3
J1
GROVE1
J2
GROVE2
JP2
J3_Bridged12
10kΩ R1
JP3
Jumper_2_Open
R3
10kΩ
J5
Conn_02x05_Odd_Even
VSENS
H2
MountingHole
H1
MountingHole
H3
MountingHole
LO1
smartcitizen
LO2
fablab
C3
10nF
C4
100nF
C8
10nF
C9
100nF
C12
10nF
C13
100nF
Notes:
MOLEX 6x1 2.54mm Male: 22232061
TOBY 1.28
Sheet: /
File: smartcitizen-adc-8ch-step.sch
Title:
Size: A4
Date:
Rev:
KiCad E.D.A. kicad (5.1.10-1-10_14)
Id: 1/1