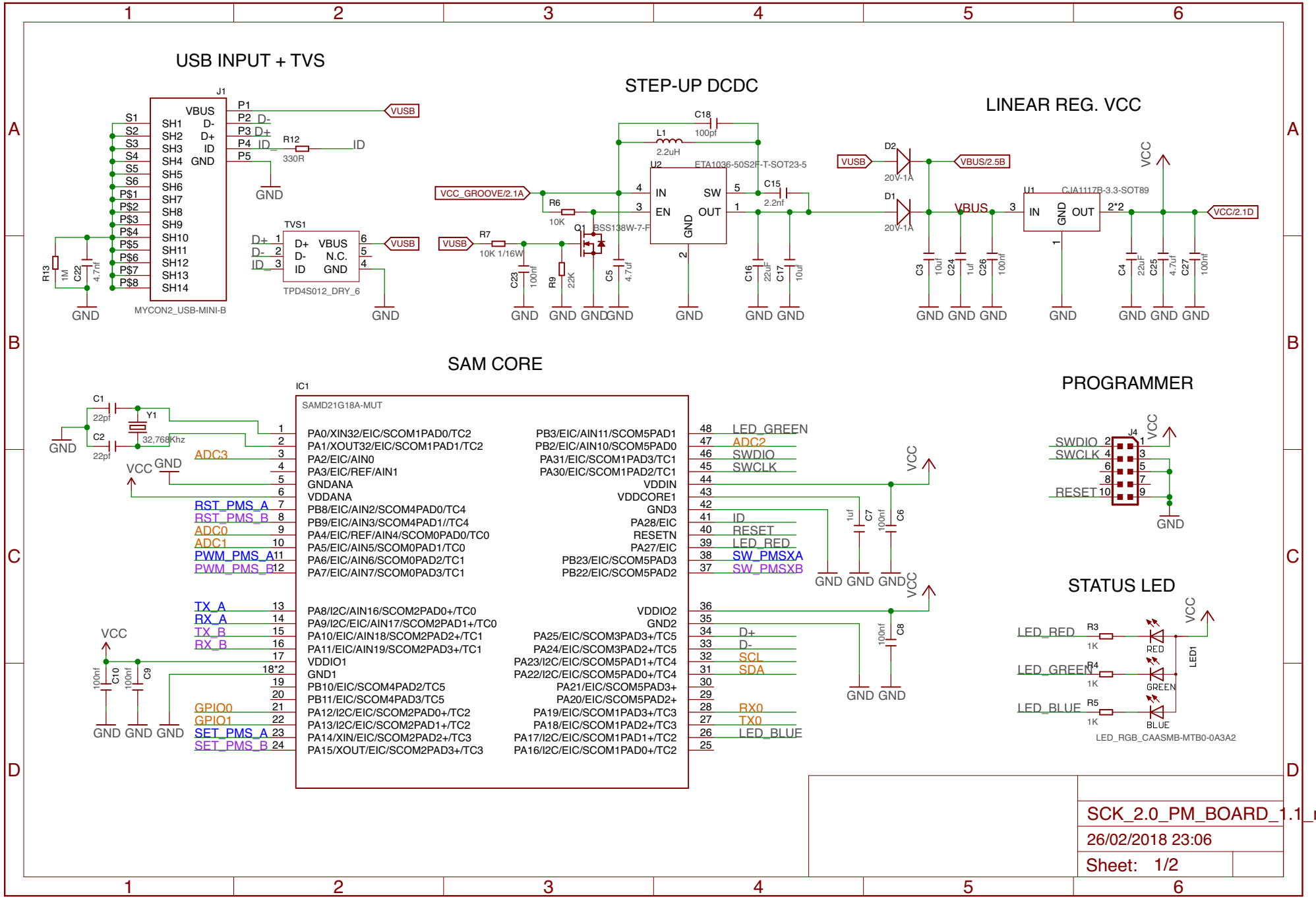
USB INPUT + TVS
J1
MYCON2_USB-MINI-B
VBUS
D-
D+
ID
GND
VUSB
R12
330R
ID
TVS1
TPD4S012_DRY_6
STEP-UP DCDC
U2
ETA1036-50S2F-T-SOT23-5
IN
EN
SW
OUT
GND
VCC_GROOVE/2.1A
R6
10K
R7
10K 1/16W
Q1
BSS138W-7-F
L1
2.2uH
C18
100pf
C15
2.2nf
LINEAR REG. VCC
D2
D1
20V-1A
VBUS/2.5B
U1
CJA1117B-3.3-SOT89
VCC/2.1D
VCC
SAM CORE
IC1
SAMD21G18A-MUT
Y1
32,768Khz
C1
C2
22pf
ADC3
RST_PMS_A
RST_PMS_B
ADC0
ADC1
PWM_PMS_A
PWM_PMS_B
TX_A
RX_A
TX_B
RX_B
GPIO0
GPIO1
SET_PMS_A
SET_PMS_B
PA0/XIN32/EIC/SCOM1PAD0/TC2
PA1/XOUT32/EIC/SCOM1PAD1/TC2
PA2/EIC/AIN0
PA3/EIC/REF/AIN1
GNDANA
VDDANA
PB8/EIC/AIN2/SCOM4PAD0/TC4
PB9/EIC/AIN3/SCOM4PAD1//TC4
PA4/EIC/REF/AIN4/SCOM0PAD0/TC0
PA5/EIC/AIN5/SCOM0PAD1/TC0
PA6/EIC/AIN6/SCOM0PAD2/TC1
PA7/EIC/AIN7/SCOM0PAD3/TC1
PA8/I2C/AIN16/SCOM2PAD0+/TC0
PA9/I2C/EIC/AIN17/SCOM2PAD1+/TC0
PA10/EIC/AIN18/SCOM2PAD2+/TC1
PA11/EIC/AIN19/SCOM2PAD3+/TC1
VDDIO1
GND1
PB10/EIC/SCOM4PAD2/TC5
PB11/EIC/SCOM4PAD3/TC5
PA12/I2C/EIC/SCOM2PAD0+/TC2
PA13/I2C/EIC/SCOM2PAD1+/TC2
PA14/XIN/EIC/SCOM2PAD2+/TC3
PA15/XOUT/EIC/SCOM2PAD3+/TC3
PB3/EIC/AIN11/SCOM5PAD1
PB2/EIC/AIN10/SCOM5PAD0
PA31/EIC/SCOM1PAD3/TC1
PA30/EIC/SCOM1PAD2/TC1
VDDIN
VDDCORE1
GND3
PA28/EIC
RESETN
PA27/EIC
PB23/EIC/SCOM5PAD3
PB22/EIC/SCOM5PAD2
VDDIO2
GND2
PA25/EIC/SCOM3PAD3+/TC5
PA24/EIC/SCOM3PAD2+/TC5
PA23/I2C/EIC/SCOM5PAD1+/TC4
PA22/I2C/EIC/SCOM5PAD0+/TC4
PA21/EIC/SCOM5PAD3+
PA20/EIC/SCOM5PAD2+
PA19/EIC/SCOM1PAD3+/TC3
PA18/EIC/SCOM1PAD2+/TC3
PA17/I2C/EIC/SCOM1PAD1+/TC2
PA16/I2C/EIC/SCOM1PAD0+/TC2
LED_GREEN
ADC2
SWDIO
SWCLK
ID
RESET
LED_RED
SW_PMSXA
SW_PMSXB
D+
D-
SCL
SDA
RX0
TX0
LED_BLUE
PROGRAMMER
J4
SWDIO
SWCLK
RESET
STATUS LED
LED_RED
LED_GREEN
LED_BLUE
R3
R4
R5
1K
RED
GREEN
BLUE
LED1
LED_RGB_CAASMB-MTB0-0A3A2
SCK_2.0_PM_BOARD_1.1_rev_1
26/02/2018 23:06
Sheet: 1/2