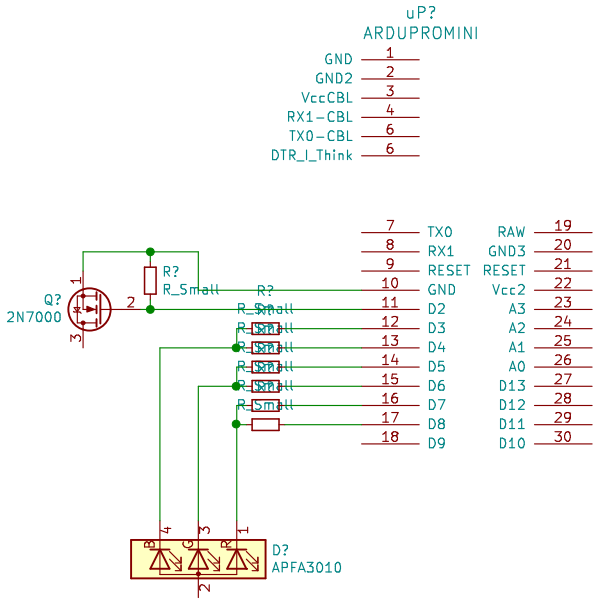

Sheet: /
File: Cardreader_522.sch

Title:

Size: A4	Date:	Rev:
KiCad E.D.A. kicad 5.0.2+dfsg1-1		Id: 1/1