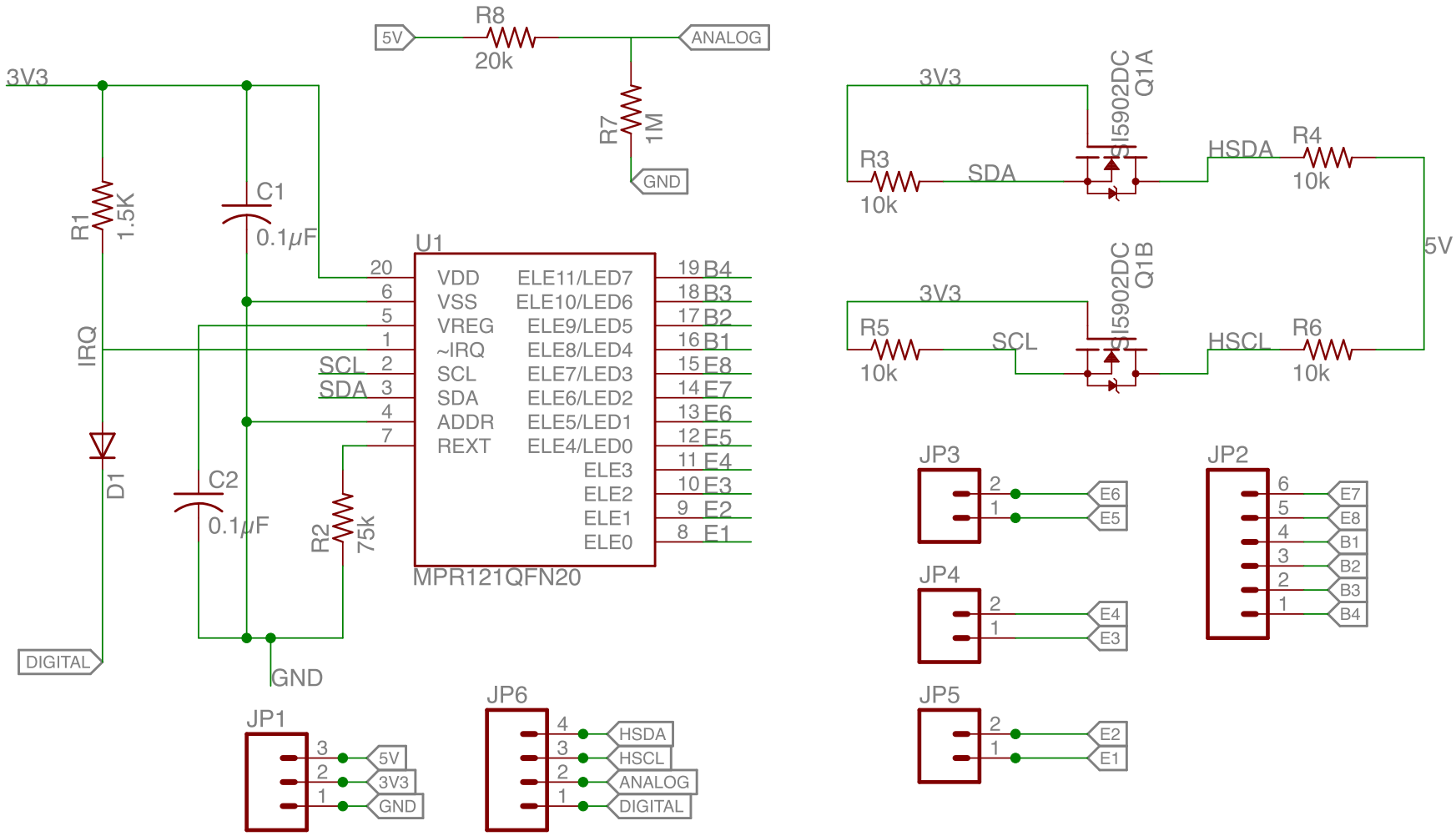

2014-08-20 2:23 PM f=1.50 /Users/metamanda/Documents/work/fabule/git/Fabule/clyde/hardware/pcbs/for_githubOSH/touchy_feely.sch (Sheet: 1/1)