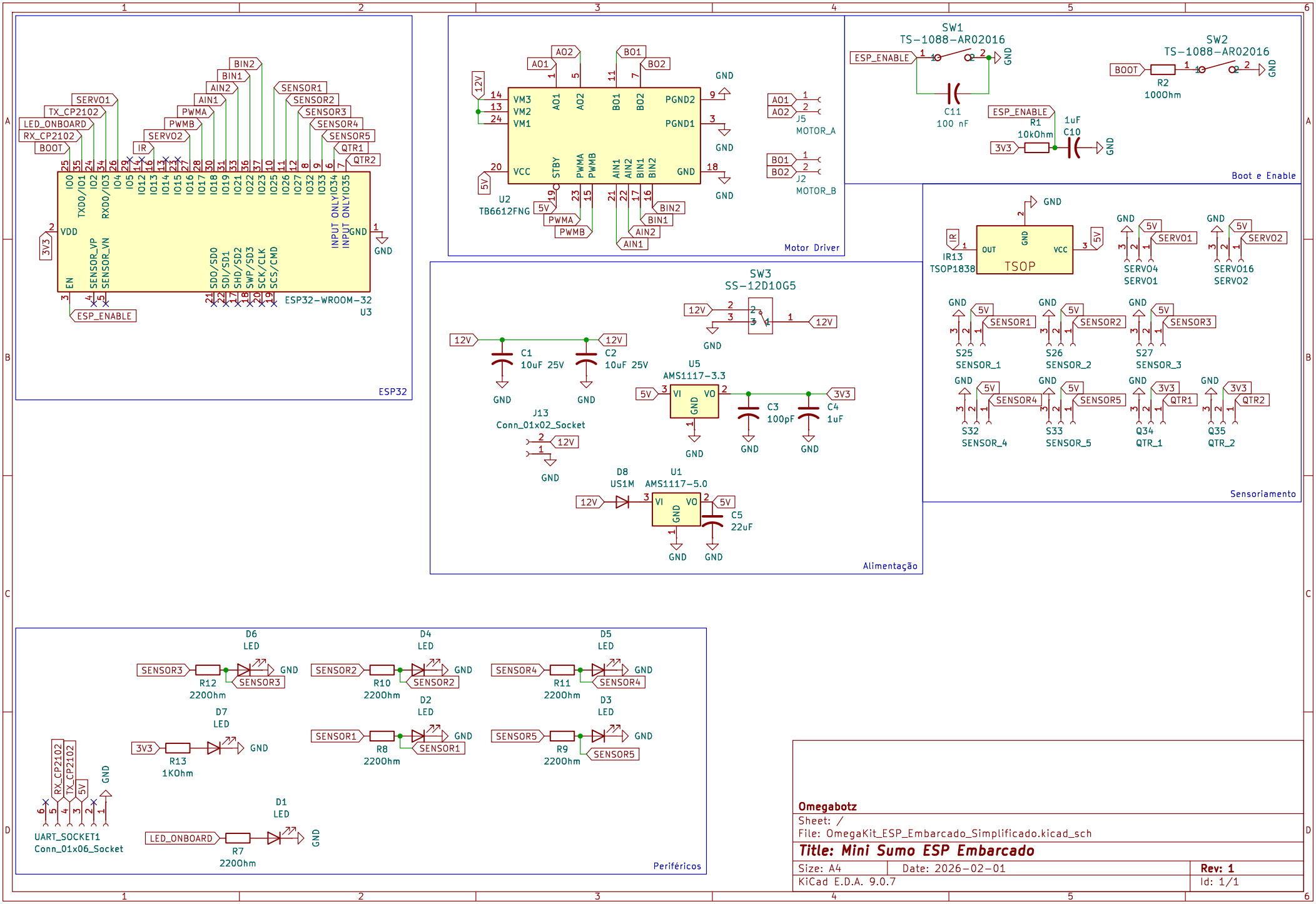
ESP32
ESP32-WROOM-32
U3
Motor Driver
U2
TB6612FNG
J5
MOTOR_A
J2
MOTOR_B
Boot e Enable
SW1
TS-1088-AR02016
SW2
TS-1088-AR02016
C11
100 nF
R1
10kOhm
C10
1uF
R2
100Ohm
Sensoriamento
IR13
TSOP1838
TSOP
S25
SENSOR_1
S26
SENSOR_2
S27
SENSOR_3
S32
SENSOR_4
S33
SENSOR_5
Q34
QTR_1
Q35
QTR_2
SERVO4
SERVO1
SERVO16
SERVO2
Alimentação
SW3
SS-12D10G5
C1
10uF 25V
C2
10uF 25V
U5
AMS1117-3.3
C3
100pF
C4
1uF
J13
Conn_01x02_Socket
D8
US1M
U1
AMS1117-5.0
C5
22uF
Periféricos
D6
LED
R12
220Ohm
D4
LED
R10
220Ohm
D5
LED
R11
220Ohm
D7
LED
R13
1KOhm
D2
LED
R8
220Ohm
D3
LED
R9
220Ohm
D1
LED
R7
220Ohm
UART_SOCKET1
Conn_01x06_Socket
Omegabotz
Sheet: /
File: OmegaKit_ESP_Embarcado_Simplificado.kicad_sch
Title: Mini Sumo ESP Embarcado
Size: A4
Date: 2026-02-01
Rev: 1
KiCad E.D.A. 9.0.7
Id: 1/1