RRA

LAB 2

Rang normal si Operatii cu Sisteme

1) Rang Normal

Fie o realizare $G(s) = \begin{bmatrix} A & B \\ C & D \end{bmatrix}$, nu neaparat minimala. Definim **rangul normal** al lui $G(s)$ si $\mathrm{sE}_z - A_z$ (fascicul de zerouri al lui H) in acest fel: $\mathrm{rang}_n G(s) = \mathrm{rang}_n(\mathrm{sE}_z - A_z) - n$.

Haide sa vedem si de ce:

Mai intai sa ne aducem aminte cine este $\mathrm{sE}_z - A_z = \begin{bmatrix} A - \mathrm{sI} & B \\ C & D \end{bmatrix}$

$$\mathrm{rang}_n(\mathrm{sE}_z - A_z) = \mathrm{rang}_n \begin{bmatrix} I & 0 \\ C(\mathrm{sI} - A)^{-1} & I \end{bmatrix} * \begin{bmatrix} A - \mathrm{sI} & B \\ C & D \end{bmatrix} * \begin{bmatrix} I & (\mathrm{sI} - A)^{-1}B \\ 0 & I \end{bmatrix} =$$

$$\mathrm{rang}_n \begin{bmatrix} A - \mathrm{sI} & B \\ 0 & C(\mathrm{sI} - A)^{-1}B + D \end{bmatrix} * \begin{bmatrix} I & (\mathrm{sI} - A)^{-1}B \\ 0 & I \end{bmatrix} =$$

$\mathrm{rang}_n \begin{bmatrix} A - \mathrm{sI} & 0 \\ 0 & C(\mathrm{sI} - A)^{-1}B + D \end{bmatrix} = \mathrm{rang}_n \begin{bmatrix} A - \mathrm{sI} & 0 \\ 0 & G(s) \end{bmatrix}$. Practic am facut matrice diagonala de unde scot usor rangul ei, si anume $\mathrm{rang}_n \begin{bmatrix} A - \mathrm{sI} & 0 \\ 0 & G(s) \end{bmatrix} = \mathrm{rang}_n\, G(s) + \mathrm{rang}_n\,(A - \mathrm{sI}) = \mathrm{rang}_n\, G(s) + n, \text{pentru } \forall$ realizare

Complement Schur

Fie matricea $M = \begin{bmatrix} M_{11} & M_{12} \\ M_{21} & M_{22} \end{bmatrix}$. Definim $M/M_{22} = M_{11} - M_{12}M_{22}^{-1}M_{21}$ si se numeste complement Schur al lui M in raport cu M_{22}

$M/M_{11} = M_{22} - M_{21}M_{11}^{-1}M_{12}$ si se numeste complement Schur al lui M in raport cu M_{11}

In acest sens, $\mathrm{rang}\, M = \begin{cases} \mathrm{rang}\, M_{11} + \mathrm{rang}\, M/M_{11} \\ \mathrm{rang}\, M_{22} + \mathrm{rang}\, M/M_{22} \end{cases}$

2) Operatii cu sisteme

1. ***Dualizarea***: $G(s) \to G^T(s) \Rightarrow \begin{bmatrix} A & B \\ C & D \end{bmatrix} \to \begin{bmatrix} A^T & C^T \\ B^T & D^T \end{bmatrix}$. **Dualul este bine definit pentyru orice sistem**

2. ***Inversarea:*** $G(s) \to G^{-1}(s)$. Fie un sistem $y = \mathrm{Gu}$. Daca **numarul de intrati = numarul de iesiri** si **G este inversabila ca matrice rationala**, atunci se definteste **inversul** acestui sistem prin **interschimbarea intrarilor si iesirilor (practic polii si zerourile fac switch).** Daca in plus D este inversabil, atunci o realizare de stare este $G^{-1}(s) = \begin{bmatrix} A - \mathrm{BD}^{-1}C & \mathrm{BD}^{-1} \\ -D^{-1}C & D^{-1} \end{bmatrix}$. Daca doamne fereste D^{-1} **nu** $\exists$, **nu** pot scrie pe $G(s)$ in **spatiul starilor (state-space)**

3. ***Conjugarea:*** $G(s) \to \begin{cases} G^T(-s) = \tilde{G}(s) \text{ pentru coeficienti } \mathbb{R} \\ \overline{G^T(\overline{-s})} = \tilde{G}(s) \text{ pentru coeficienti } \mathbb{C} \end{cases}$

4. ***Conexiune serie:*** fie 2 sisteme $\begin{cases} y_1 = G_1 u_1 & G_1 = \begin{bmatrix} A_1 & B_1 \\ C_1 & D_1 \end{bmatrix} \\ y_2 = G_2 u_2 & G_2 = \begin{bmatrix} A_2 & B_2 \\ C_2 & D_2 \end{bmatrix} \end{cases}$, Daca $m_{G_1} = p_{G_2}$, adica numarul de intari din G_1 = numarul de iesiri din G_2, atunci conexiunea serie a lui G_1 cu G_2 este sistemul cu $\begin{cases} u := u_1 \\ y := y_2 \\ u_2 = y_1 \end{cases}$. In acest sens, conexunea serie este bine definita si matricea de transfer a sistemului este $G(s) = G_1(s)G_2(s) = \begin{bmatrix} A_2 & B_2C_1 & B_2D_1 \\ 0 & A_1 & B_1 \\ C_2 & D_2C_1 & D_2D_1 \end{bmatrix}$

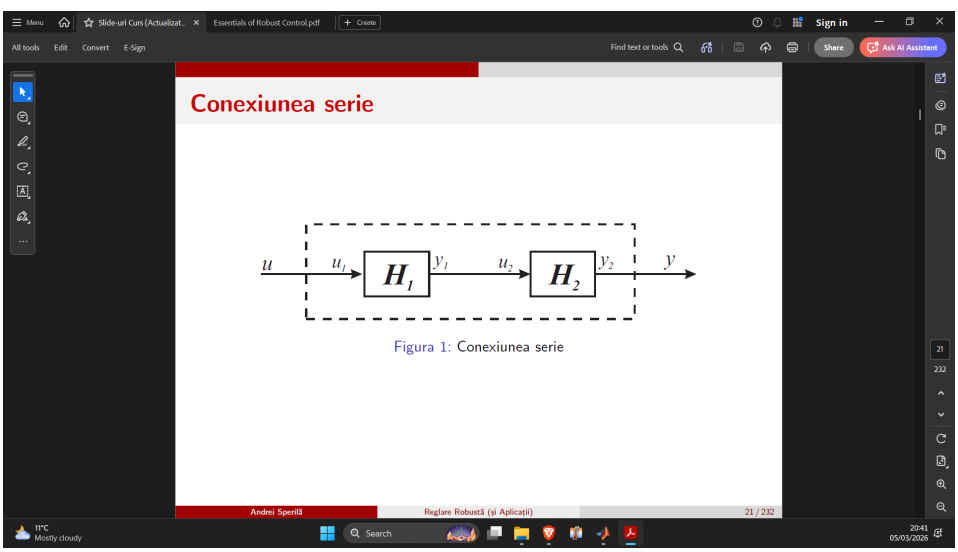

5.

Conexiune paralel: Fie 2 sisteme $\begin{cases} y_1 = G_1 u_1 & G_1 = \begin{bmatrix} A_1 & B_1 \\ C_1 & D_1 \end{bmatrix} \\ y_2 = G_2 u_2 & G_2 = \begin{bmatrix} A_2 & B_2 \\ C_2 & D_2 \end{bmatrix} \end{cases}$. Daca aceste sisteme au **acelasi numar de intrari** si respectiv **acelasi numar de iesiri**, atunci se defineste conexiunea paralel a lui G_1 cu G_2 ca fiins sistemul care are intrarea u obtinuta punand $\begin{cases} u := u_1 = u_2 \\ y := y_1 + y_2 \end{cases}$. In acest sens, conexiunea paralel este bine definita, iar matricea de transfer a sistemului este: $G(s) = G_1(s) + G_2(s) = \begin{bmatrix} A_1 & 0 & B_1 \\ 0 & A_2 & B_2 \\ C_1 & C_2 & D_1 + D_2 \end{bmatrix}$

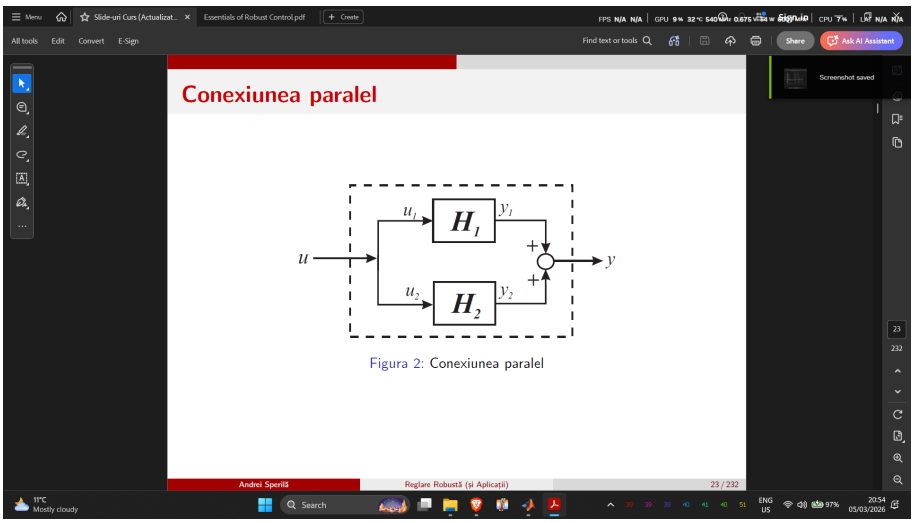

6.

Conexiune in bucla de reactie: Fie 2 sisteme $\begin{cases} y_1 = G_1 u_1 & G_1 = \begin{bmatrix} A_1 & B_1 \\ C_1 & D_1 \end{bmatrix} \\ y_2 = G_2 u_2 & G_2 = \begin{bmatrix} A_2 & B_2 \\ C_2 & D_2 \end{bmatrix} \end{cases}$. Daca **numarul de iesiri a lui** G_1 = **numarul de intrari al lui** G_2 si **numarul de iesiri a lui** G_2 = **numarul de intrari al lui** G_1, atunci se defineste conexiunea in bucla de reactie a lui G_1 cu G_2 ca fiind sistemul ce are $\begin{cases} \text{intrarile } w_1 \text{ si } w_2 \\ \text{iesirile } y_1 \text{ si } y_2 \end{cases}$, punand $\begin{cases} u_1 = w_1 + y_2 \\ u_2 = y_2 + y_1 \end{cases}$. In acest sens, conexiunea in bucla de reactie este bine definita $\Leftrightarrow \begin{bmatrix} I & -D_2 \\ -D_1 & I \end{bmatrix}$ este inversabila, sau echivalent $\Leftrightarrow \begin{cases} I - D_2 D_1 \text{ inversabila} \\ I - D_1 D_2 \text{ inversabila} \end{cases}$.

Sa folosim in acest caz <u>Complement Schur:</u> $\operatorname{rang} \begin{bmatrix} I_{p1} & -D_1 \\ -D_2 & I_{p2} \end{bmatrix} = p_1 + p_2 \Leftrightarrow \begin{cases} p_1 + \operatorname{rang}(I - D_2 D_1) = p_1 + p_2 \\ p_2 + \operatorname{rang}(I - D_1 D_2) = p_1 + p_2 \end{cases}$

$\Leftrightarrow \begin{cases} \operatorname{rang}(I - D_2 D_1) = p_2 \\ \operatorname{rang}(I - D_1 D_2) = p_1 \end{cases}$. Daca $\begin{bmatrix} I & -D_2 \\ -D_1 & I \end{bmatrix}$ nu este inversabila, atunci **nu avem formula**

pentru bucla pe stare, deci **improprie** si poate fi scrisa pe descriptori (A, B, C, D, E)

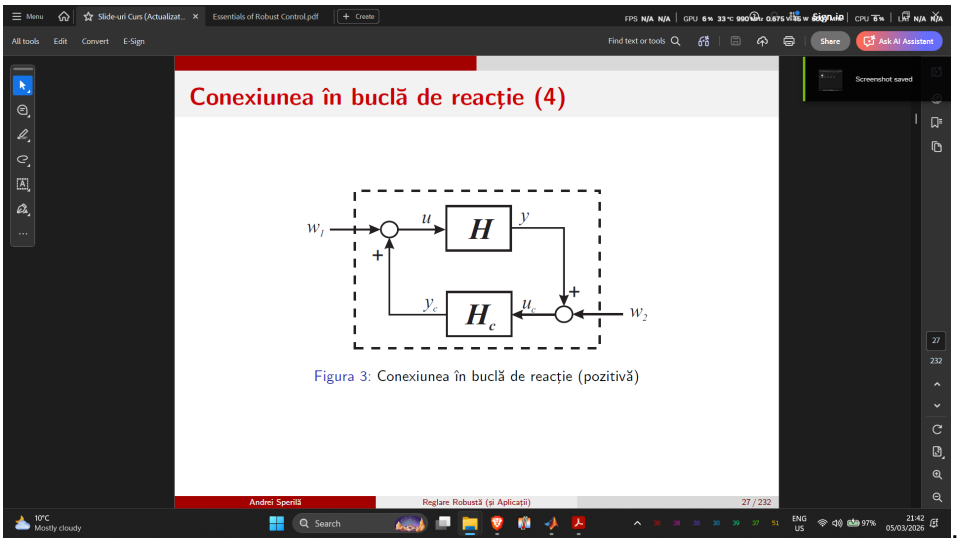

Daca avem reactie negativa, putem adauga un bloc cu constanta -1 la G_2, adica schimbam semnul

```
clear
close all
clc

s = tf('s');
```

Aici definim un G

```
G = 1 / (s + 1) * ones(2,2)
```

```
G =

  From input 1 to output...
         1
   1:  -----
       s + 1

         1
   2:  -----
       s + 1

  From input 2 to output...
         1
   1:  -----
       s + 1

         1
   2:  -----
       s + 1

  Continuous-time transfer function.
  Model Properties
```

Il scriem in spatiul starilor (state-space)

```
G_ss = ss(G)
```

```
G_ss =

  A = 
       x1  x2
   x1  -1   0
   x2   0  -1

  B = 
       u1  u2
   x1   2   0
   x2   0   2

  C = 
        x1   x2
   y1  0.5  0.5
   y2  0.5  0.5

  D = 
       u1  u2
   y1   0   0
   y2   0   0

Continuous-time state-space model.
Model Properties
```

```
% Ma uit la zerourile de invarianta
tzero(G_ss.A, G_ss.B, G_ss.C, G_ss.D)
```

```
ans =

  0×1 empty double column vector
```

Observam ca nu avem zerouri invariante, adica nu pica rangul reprezentarii pe stare

```
rank([G_ss.A, G_ss.B; ...
      G_ss.C, G_ss.D])
```

```
ans =
3
```

```
% se vede ca nu este minimal (rangul nu este 4)
```

Aici inlocuim pe D cu identitatea

```
G_ss.D = eye(2);

G_ss
```

```
G_ss =

  A = 
       x1  x2
   x1  -1   0
   x2   0  -1

  B = 
       u1  u2
```

```
   x1   2   0
   x2   0   2

  C =
        x1   x2
   y1  0.5  0.5
   y2  0.5  0.5

  D =
       u1  u2
   y1   1   0
   y2   0   1

Continuous-time state-space model.
Model Properties
```

```
G_min = ss(G_ss, 'min')
```

```
G_min =

  A =
       x1
   x1  -1

  B =
          u1     u2
   x1  1.414  1.414

  C =
           x1
   y1  0.7071
   y2  0.7071

  D =
       u1  u2
   y1   1   0
   y2   0   1

Continuous-time state-space model.
Model Properties
```

```
tf(G_min)
```

```
ans =

  From input 1 to output...
       s + 2
   1:  -----
       s + 1

         1
   2:  -----
       s + 1

  From input 2 to output...
         1
   1:  -----
       s + 1

       s + 2
   2:  -----
```

```
       s + 1

Continuous-time transfer function.
Model Properties
```

```
tzero(G_min)
```

```
ans =
-3.0000
```

Mai ok decat $\mathrm{inv}(G_\mathrm{min})$

```
G_inv = eye(size(G_min)) / G_min
```

```
G_inv =

  A =
           x1      x2      x3
   x1      -1   1.414   1.414
   x2  0.7071       1       0
   x3  0.7071       0       1

  B =
       u1  u2
   x1   0   0
   x2  -1   0
   x3   0  -1

  C =
       x1  x2  x3
   y1   0   1   0
   y2   0   0   1

  D =
       u1  u2
   y1   0   0
   y2   0   0

  E =
       x1  x2  x3
   x1   1   0   0
   x2   0   0   0
   x3   0   0   0

Continuous-time state-space model.
Model Properties
```

```
tf(G_inv)
```

```
ans =

  From input 1 to output...
       s + 2
   1:  -----
       s + 3

        -1
   2:  -----
       s + 3
```

```
  From input 2 to output...
        -1
   1:  -----
       s + 3

       s + 2
   2:  -----
       s + 3

Continuous-time transfer function.
Model Properties
```

```
tzero(G_inv)
```

```
ans =
-1.0000
```

Prin transpunere, se poate vedea dualitatea

```
G_inv'
```

```
ans =

  A =
             x1       x2       x3
   x1         1  -0.7071  -0.7071
   x2    -1.414       -1        0
   x3    -1.414        0       -1

  B =
       u1  u2
   x1   0   0
   x2  -1   0
   x3   0  -1

  C =
       x1  x2  x3
   y1   0  -1   0
   y2   0   0  -1

  D =
       u1  u2
   y1   0   0
   y2   0   0

  E =
       x1  x2  x3
   x1   1   0   0
   x2   0   0   0
   x3   0   0   0

Continuous-time state-space model.
Model Properties
```

```
% Daca G este rationala, G' este conjugata
```

Aici vedem conjugatul

```
help conj
```

```
 conj - Complex conjugate
    This MATLAB function returns the complex conjugate of each element in Z.

    Syntax
      Zc = conj(Z)

    Input Arguments
      Z - Input array
        scalar | vector | matrix | multidimensional array

    Examples
      Find Complex Conjugate of Complex Number
      Find Complex Conjugate of Complex Values in Matrix

    See also  i ,  j , imag, real, ctranspose, complex

    Introduced in MATLAB before R2006a
    Documentation for conj
    Other uses of conj
```

```
conj(G_min)
```

```
ans =

  A =
       x1
   x1  -1

  B =
          u1     u2
   x1  1.414  1.414

  C =
            x1
   y1  0.7071
   y2  0.7071

  D =
       u1  u2
   y1   1   0
   y2   0   1

Continuous-time state-space model.
Model Properties
```

```
% Dualul

T = ss(randn(3), randn(3,2), randn(2,3), zeros(2,2))
```

```
T =

  A =
             x1       x2       x3
   x1   0.5377   0.8622  -0.4336
   x2    1.834   0.3188   0.3426
   x3   -2.259   -1.308    3.578

  B =
              u1        u2
   x1     2.769    0.7254
   x2     -1.35  -0.06305
```

```
  x3     3.035    0.7147

  C =
            x1       x2       x3
  y1   -0.205     1.49    1.417
  y2  -0.1241    1.409   0.6715

  D =
       u1  u2
  y1    0   0
  y2    0   0

Continuous-time state-space model.
Model Properties
```

Conexiunea serie

```
Eps = series(T, G_ss)
```

```
Eps =

  A =
            x1       x2       x3       x4       x5
  x1        -1        0  -0.4099    2.979    2.834
  x2         0       -1  -0.2483    2.818    1.343
  x3         0        0   0.5377   0.8622  -0.4336
  x4         0        0    1.834   0.3188   0.3426
  x5         0        0   -2.259   -1.308    3.578

  B =
             u1        u2
  x1          0         0
  x2          0         0
  x3      2.769    0.7254
  x4      -1.35  -0.06305
  x5      3.035    0.7147

  C =
            x1       x2       x3       x4       x5
  y1       0.5      0.5   -0.205     1.49    1.417
  y2       0.5      0.5  -0.1241    1.409   0.6715

  D =
       u1  u2
  y1    0   0
  y2    0   0

Continuous-time state-space model.
Model Properties
```

```
% sau
Eps1 = G_ss * T
```

```
Eps1 =

  A =
            x1       x2       x3       x4       x5
  x1        -1        0  -0.4099    2.979    2.834
  x2         0       -1  -0.2483    2.818    1.343
  x3         0        0   0.5377   0.8622  -0.4336
  x4         0        0    1.834   0.3188   0.3426
  x5         0        0   -2.259   -1.308    3.578
```

```
  B =
             u1        u2
   x1         0         0
   x2         0         0
   x3     2.769    0.7254
   x4     -1.35  -0.06305
   x5     3.035    0.7147

  C =
            x1       x2       x3       x4       x5
   y1      0.5      0.5   -0.205     1.49    1.417
   y2      0.5      0.5  -0.1241    1.409   0.6715

  D =
       u1  u2
   y1   0   0
   y2   0   0

Continuous-time state-space model.
Model Properties
```

```
% Pentru ca 2 realizari sunt diferite, rationala nu este la fel
```

Conexiune paralel

```
Par = G_ss + T
```

```
Par =

  A =
            x1       x2       x3       x4       x5
   x1       -1        0        0        0        0
   x2        0       -1        0        0        0
   x3        0        0   0.5377   0.8622  -0.4336
   x4        0        0    1.834   0.3188   0.3426
   x5        0        0   -2.259   -1.308    3.578

  B =
             u1        u2
   x1         2         0
   x2         0         2
   x3     2.769    0.7254
   x4     -1.35  -0.06305
   x5     3.035    0.7147

  C =
            x1       x2       x3       x4       x5
   y1      0.5      0.5   -0.205     1.49    1.417
   y2      0.5      0.5  -0.1241    1.409   0.6715

  D =
       u1  u2
   y1   1   0
   y2   0   1

Continuous-time state-space model.
Model Properties
```

Conexiune in bucla de reactie

```
s_cl = feedback(G, -T)
```

```
s_cl =

  A =
             x1       x2       x3       x4       x5
   x1        -1        0  -0.4099    2.979    2.834
   x2         0       -1  -0.2483    2.818    1.343
   x3     1.747    1.747   0.5377   0.8622  -0.4336
   x4   -0.7065  -0.7065    1.834   0.3188   0.3426
   x5     1.875    1.875   -2.259   -1.308    3.578

  B =
        u1  u2
   x1    2   0
   x2    0   2
   x3    0   0
   x4    0   0
   x5    0   0

  C =
         x1   x2   x3   x4   x5
   y1  0.5  0.5    0    0    0
   y2  0.5  0.5    0    0    0

  D =
        u1  u2
   y1    0   0
   y2    0   0

Continuous-time state-space model.
Model Properties
```

```
% Sau feedback(G, T, 1). Tot aia
```

Transfromari Liniar Fractionare (TLF-uri)

Haos matlab

Aceste coexiuni sunt o extensie la clasa **matricilor de transfer rationale** a transformarii liniar fractionare din cazul scalar

$f(\lambda) = \dfrac{a + b\lambda}{c + d\lambda}(\text{Transformare Mobius})$, unde a,b,c,d sunt constante reale

Fie 2 sisteme $\begin{cases} T(s) = \begin{bmatrix} A & B_1 & B_2 \\ C_1 & D_{11} & D_{12} \\ C_2 & D_{21} & D_{22} \end{bmatrix} = \begin{bmatrix} T_{11} & T_{12} \\ T_{21} & T_{22} \end{bmatrix} \\ K(s) = \begin{bmatrix} A_K & B_K \\ C_K & D_K \end{bmatrix} \end{cases}$

Daca $\begin{cases} \text{numar iesiri ale lui } T_{22} = \text{numar intrati ale lui } K \\ \text{numar iesiri alu lui } K = \text{numar intrari ale lui } T_{22} \end{cases}$ se defineste **Transformarea Liniar Fractionara**

INFERIOARA (TLFi) a lui T cu K ca fiind sistemul obtinut punand $\begin{cases} u_2 = y_K \\ u_K = y_2 \end{cases}$

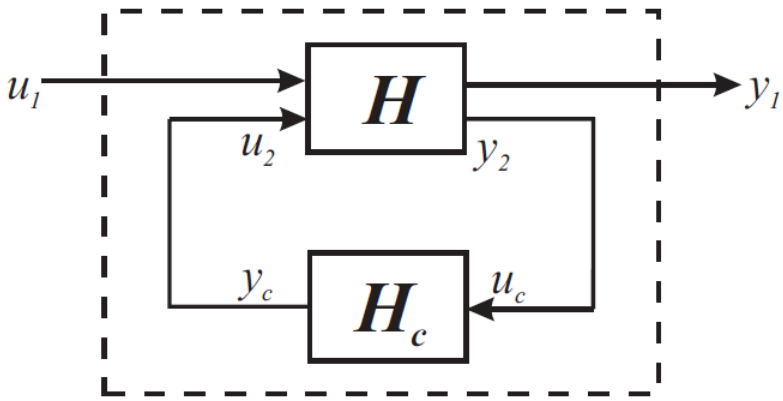

Figura 5: Transformare liniar fracționară inferioară

$\text{TLFI}(T, K) = T_{11} + T_{12}K(I - T_{22}K)^{-1}T_{21}$

Trebuie ca $(I - T_{22}K)^{-1}$ sa existe. De asemenea, pentru buna definire avem nevoie ca $\begin{bmatrix} I & -D_c \\ -D_{22} & I \end{bmatrix}$ sa fie inversabila

Daca $\begin{cases} \text{numar iesiri ale lui } T_{11} = \text{numar intrati ale lui } K \\ \text{numar iesiri alu lui } K = \text{numar intrari ale lui } T_{11} \end{cases}$ se defineste **Transformarea Liniar Fractionara**

SUPERIOARA (TLFs) a lui T cu K ca fiind sistemul obtinut punand $\begin{cases} u_1 = y_K \\ u_K = y_1 \end{cases}$

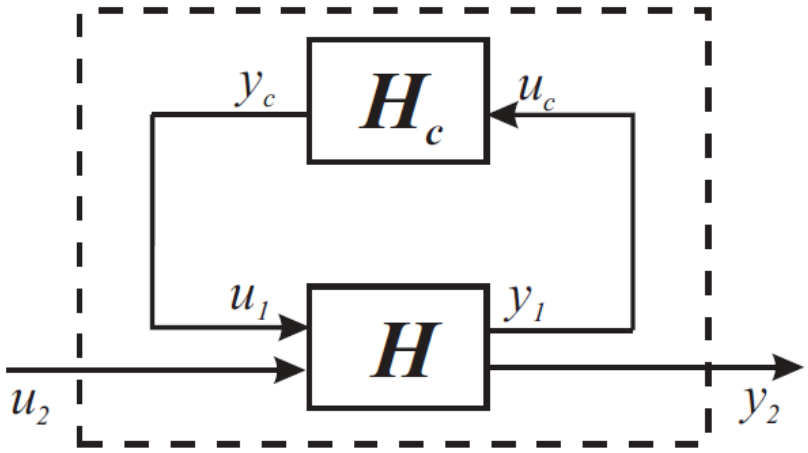

Figura 6: Transformare liniar fracționară superioară

$$\mathrm{TLFS}(T, K) = T_{22} + T_{21}K(I - T_{11}K)^{-2}T_{12}$$

Trebuie ca $(I - T_{11}K)^{-2}$ sa existe. De semenea, pentru buna definire avem nevoie de $\begin{bmatrix} I & -D_{11} \\ -D_K & I \end{bmatrix}$ sa fie inversabila

```
clear
close all
clc

s = tf('s');

G = 1 / (s + 1) * ones(2,2)
```

```
G =

  From input 1 to output...
         1
   1:  -----
       s + 1

         1
   2:  -----
       s + 1

  From input 2 to output...
         1
   1:  -----
       s + 1

         1
   2:  -----
       s + 1
```

```
Continuous-time transfer function.
Model Properties
```

```
G_ss = ss(G)
```

```
G_ss =

  A =
       x1  x2
   x1  -1   0
   x2   0  -1

  B =
       u1  u2
   x1   2   0
   x2   0   2

  C =
        x1   x2
   y1  0.5  0.5
   y2  0.5  0.5

  D =
       u1  u2
   y1   0   0
   y2   0   0

Continuous-time state-space model.
Model Properties
```

```
G_ss.D = eye(2);
G_ss
```

```
G_ss =

  A =
       x1  x2
   x1  -1   0
   x2   0  -1

  B =
       u1  u2
   x1   2   0
   x2   0   2

  C =
        x1   x2
   y1  0.5  0.5
   y2  0.5  0.5

  D =
       u1  u2
   y1   1   0
   y2   0   1

Continuous-time state-space model.
Model Properties
```

```
H = 2 / (s + 3);

help lft
```

```
 lft - Generalized feedback interconnection of two models (Redheffer star product)
    This MATLAB function forms the star product or linear fractional
    transformation (LFT) of two model objects or model arrays.

    Syntax
      lft
      sys = lft(sys1,sys2,nu,ny)

    See also connect, feedback

    Introduced in Control System Toolbox before R2006a
    Documentation for lft
    Other uses of lft
```

Aici definim **TLFi**

```
lft(G_ss, H)
```

```
ans =

  A =
       x1  x2  x3
   x1  -1   0   0
   x2   0  -1   2
   x3   1   1  -1

  B =
       u1
   x1   2
   x2   0
   x3   0

  C =
        x1   x2   x3
   y1  0.5  0.5    0

  D =
       u1
   y1   1

Continuous-time state-space model.
Model Properties
```

```
% Primul este ala de sus, cel de al doilea jos
```

Asta este $\mathrm{TLFI}(T, K)$

```
P_i = G_ss(1,1) + G_ss(1,2) * feedback(H,-G_ss(2,2)) * G_ss(2,1)
```

```
P_i =

  A =
       x1  x2  x3  x4  x5  x6  x7  x8  x9
   x1  -1   0   0   0   0   0   0   0   0
   x2   0  -1   0   0   0   0   0   0   0
   x3   0   0  -1   0   0   0   0   0   0
   x4   0   0   0  -1   2   0   0   0   0
   x5   0   0   0   0  -1   1   1   1   1
   x6   0   0   0   0   0  -1   0   0   0
   x7   0   0   0   0   2   0  -1   0   0
   x8   0   0   0   0   0   0   0  -1   0
   x9   0   0   0   0   0   0   0   0  -1
```

```
  B =
       u1
   x1   2
   x2   0
   x3   0
   x4   0
   x5   0
   x6   0
   x7   0
   x8   2
   x9   0

  C =
        x1   x2   x3   x4   x5   x6   x7   x8   x9
   y1  0.5  0.5  0.5  0.5    0    0    0    0    0

  D =
       u1
   y1   1

Continuous-time state-space model.
Model Properties
```

```
norm(P_i - lft(G_ss, H), 'inf')
```

```
ans =
5.5511e-17
```

```
ss(P_i - lft(G_ss, H), 'min')
```

```
ans =

  D =
       u1
   y1   0

Static gain.
Model Properties
```

O alta metoda ce a calcula inversa unei matrici

```
G_inv_2 = feedback(eye(2), eye(2) - G_ss, 1)
```

```
G_inv_2 =

  A =
       x1  x2
   x1  -2  -1
   x2  -1  -2

  B =
       u1  u2
   x1   2   0
   x2   0   2

  C =
         x1    x2
   y1  -0.5  -0.5
   y2  -0.5  -0.5
```

```
  D =
       u1  u2
   y1   1   0
   y2   0   1

Continuous-time state-space model.
Model Properties
```

TLFS = TFLI pe invers

```
lft(H, G_ss)
```

```
ans =

  A =
       x1  x2  x3
   x1  -1   1   1
   x2   2  -1   0
   x3   0   0  -1

  B =
       u1
   x1   0
   x2   0
   x3   2

  C =
        x1   x2   x3
   y1    0  0.5  0.5

  D =
       u1
   y1   1

Continuous-time state-space model.
Model Properties
```

Acum calculam $\mathrm{TLFS}\,(T, K)$

```
P_u = G_ss(2,2) + G_ss(2,1) * feedback(H, -G_ss(1,1)) * G_ss(1,2)
```

```
P_u =

  A =
       x1  x2  x3  x4  x5  x6  x7  x8  x9
   x1  -1   0   0   0   0   0   0   0   0
   x2   0  -1   0   0   0   0   0   0   0
   x3   0   0  -1   0   2   0   0   0   0
   x4   0   0   0  -1   0   0   0   0   0
   x5   0   0   0   0  -1   1   1   1   1
   x6   0   0   0   0   2  -1   0   0   0
   x7   0   0   0   0   0   0  -1   0   0
   x8   0   0   0   0   0   0   0  -1   0
   x9   0   0   0   0   0   0   0   0  -1

  B =
       u1
   x1   0
   x2   2
```

```
   x3   0
   x4   0
   x5   0
   x6   0
   x7   0
   x8   0
   x9   2

  C =
        x1   x2   x3   x4   x5   x6   x7   x8   x9
   y1  0.5  0.5  0.5  0.5    0    0    0    0    0

  D =
       u1
   y1   1

Continuous-time state-space model.
Model Properties
```

```
norm(P_u - lft(G_ss, H), 'inf')
```

```
ans =
5.5511e-17
```

```
ss(P_u - lft(G_ss, H), 'min')
```

```
ans =

  D =
       u1
   y1   0

Static gain.
Model Properties
```

Norme

Vom folosi 2 norme cunoscute de noi: $\begin{cases} \mathscr{L}_\infty \\ \mathscr{L}_2 \end{cases}$. Mai intai incepem cu norma infinit.

Pentru un $G(s) \in \mathbb{R}(s)^{\text{pxm}} \rightarrow ||G||_\infty = \begin{cases} \text{SISO} : \sup_{w \in \mathbb{R}} |G(\text{jw})| \\ \text{MIMO} : \sup_{w \in \mathbb{R}} \overline{\sigma}(G(\text{jw})) \end{cases}$. In cazul MIMO, $\overline{\sigma}$ este valoarea maxima singulara a matricii de transfer $G(s)$. Noi in cazul MIMO **nu avem valori proprii, cu functii proprii si practic ne uitam la fiecare functie si luam doar maximul.**

Facem SVD pe $G(s)$ si ne uitam la Σ care ce da $\overline{\sigma}$

```
clear
close all
clc

s = tf('s');
```

```
G = 1 / (s + 1) * ones(2,2)
```

```
G =

  From input 1 to output...
         1
   1:  -----
       s + 1

         1
   2:  -----
       s + 1

  From input 2 to output...
         1
   1:  -----
       s + 1

         1
   2:  -----
       s + 1

Continuous-time transfer function.
Model Properties
```

```
G_ss = ss(G)
```

```
G_ss =

  A =
       x1  x2
   x1  -1   0
   x2   0  -1

  B =
       u1  u2
   x1   2   0
   x2   0   2

  C =
        x1   x2
   y1  0.5  0.5
   y2  0.5  0.5

  D =
       u1  u2
   y1   0   0
   y2   0   0

Continuous-time state-space model.
Model Properties
```

```
G_ss.D = eye(2);
```

Aici arat cum se foloseset SVD si ce face aproximativ sigma(G_ss)

```
% Setez frecventa dorita
% Aici vreau sa iau din -3 in 3 10,000 puncte
w = logspace(-3, 3, 1e4);

% Aici vad cum raspunde sistemul la anumite frecvente.
```

```
% G_freq este matrice 3D
G_freq = freqresp(G_ss, w);

% Pentru simplitate, predefinesc sigmav ca fiind plin de 0
sigmav = zeros(2, length(w));

% Parcurg intervalul [-3,3] si aplic la fiecare frecventa svd
for i = 1:length(w)
    % Extrage matricea complexa statica 2x2 pentru frecventa curenta
    G_omega = G_freq(:, :, i);

    % Calculare SVD
    % Matlab, din ce vad, sorteaza automat valorile singulare in E de la
    % cel mai mare la cel mai mic
    [U, E, V] = svd(G_omega);

    % Acum extragem valorile singulare din S
    % Primul element este valoarea singulare maxima
    sigmav(:, i) = diag(E);
end

% Acum vizualiazam
figure;
semilogx(w, 20*log10(sigmav(1, :)), 'b', 'LineWidth', 2);
hold on;
semilogx(w, 20*log10(sigmav(2, :)), 'r--', 'LineWidth', 2);
grid on;
xlabel('Frecventa (rad/s)');
ylabel('Valori singulare (dB)');
title('Grafic sigma(G_ss) pe [-3,3]');
legend('Valoarea singulara maxima (sigma_1)', ...
    'Valoarea singulara minima (sigma_2)');
```

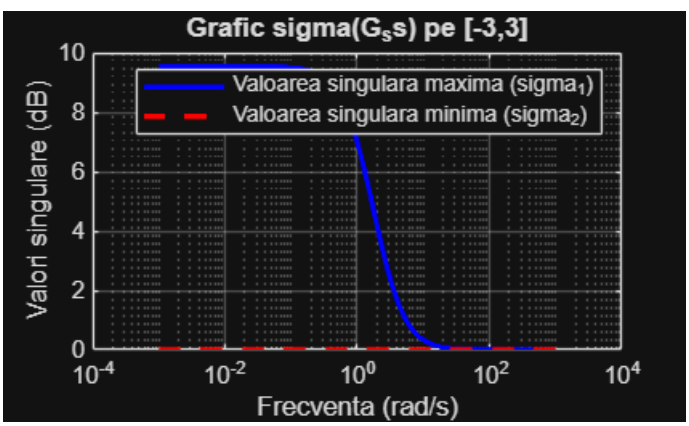


```
% Acum cautam norma infinit, adica maximul maxim de pe graficul desenat
% Noi ne uitam la valorile normale, nu pe scara logaritmica
H_inf_calculated = max(sigmav(1, :))
```

```
H_inf_calculated =
3.0000
```

```
% Ne verificam cu matlab
H_inf_builtin = norm(G_ss, 'inf')
```

```
H_inf_builtin =
3.0000
```

Daca $||G||_\infty < \infty \Leftrightarrow$ G nu are pol pe axa imaginara

```
T = ss(randn(3), randn(3,2), randn(2,3), eye(2,2))
```

```
T =

  A =
             x1       x2       x3
   x1   0.5377   0.8622  -0.4336
   x2    1.834   0.3188   0.3426
   x3   -2.259   -1.308    3.578

  B =
              u1        u2
   x1     2.769    0.7254
   x2     -1.35  -0.06305
   x3     3.035    0.7147

  C =
             x1       x2       x3
   y1   -0.205     1.49    1.417
   y2  -0.1241    1.409   0.6715

  D =
        u1  u2
   y1   1   0
   y2   0   1

Continuous-time state-space model.
Model Properties
```

```
help norm
```

```
 norm - Vector and matrix norms
    This MATLAB function returns the Euclidean norm of vector v.

    Syntax
      n = norm(v)
      n = norm(v,p)

      n = norm(X)
      n = norm(X,p)
      n = norm(X,"fro")

    Input Arguments
      v - Input vector
        vector
      X - Input array
        matrix | array
      p - Norm type
```

```
    2 (default) | positive real scalar | Inf | -Inf

Output Arguments
  n - Norm value
    scalar

Examples
  Vector Magnitude
  1-Norm of Vector
  Euclidean Distance Between Two Points
  2-Norm of Matrix
  Frobenius Norm of N-D Array

See also vecnorm, pagenorm, normest, normalize, cond, hypot

Introduced in MATLAB before R2006a
Documentation for norm
Other uses of norm
```

```
norm(G_ss, 'inf')
```

```
ans =
3.0000
```

```
help sigma
```

```
 sigma - Singular values of frequency response of dynamic system
    This MATLAB function returns the singular values sv of the frequency
    response of dynamic system model sys at each frequency in the vector
    wout.

    Syntax
      [sv,wout] = sigma(sys)
      [sv,wout] = sigma(sys,w)
      sv = sigma(sys,w,type)

      sigma(___)

    Input Arguments
      sys - Dynamic system
        dynamic system model | model array
      w - Frequencies
        {wmin,wmax} | vector | []
      type - Type of modified singular values
        1 | 2 | 3

    Output Arguments
      sv - Singular values of frequency response
        matrix
      wout - Frequencies
        vector

    Examples
      Singular Value Plot of Dynamic System
      Sigma Plot at Specified Frequencies
      Compare Singular Value Plots of Several Dynamic Systems
      Singular Value Plot with Specified Line Attributes
      Obtain Singular Value Data
      Singular Values of MIMO System
      Compute and Plot Singular Values
      Singular Value Plot of Model with Complex Coefficients
```

```
See also sigmaplot, freqresp, nyquist, bode

Introduced in Control System Toolbox before R2006a
Documentation for sigma
Other uses of sigma
```

```
figure
sigma(G_ss)
```

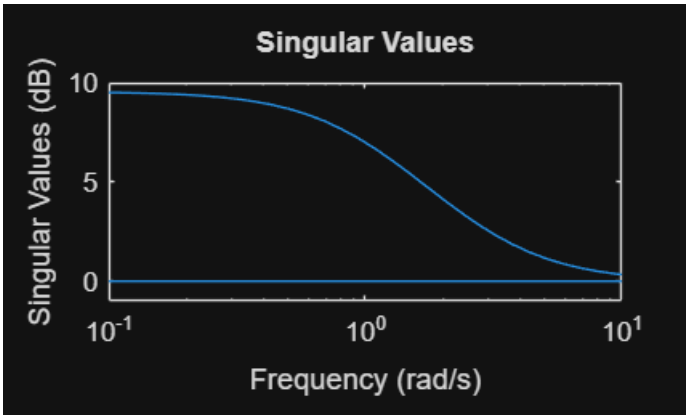


```
hinfnorm(G_ss)
```

```
ans =
3.0000
```

```
norm (G_ss, 'inf')
```

```
ans =
3.0000
```

```
figure
sigma(T)
```

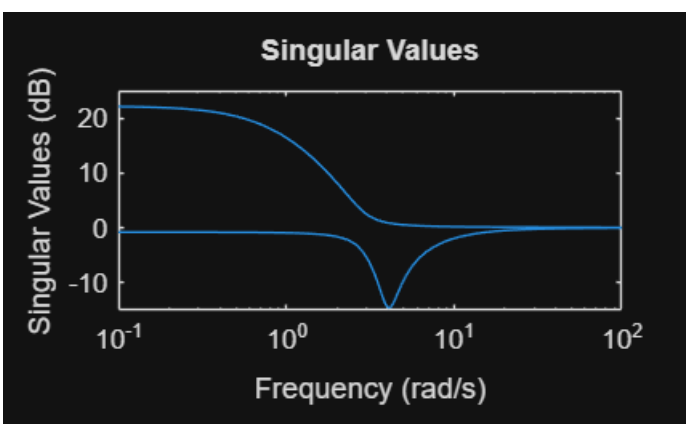


```
roots(tf(T).den{1})
```

```
ans = 3×1
    3.8142
    1.4678
   -0.8472
```

```
norm(T, 'inf')
```

```
ans =
12.9101
```

$G \in \mathscr{RL}_\infty(s)^{\text{pxm}} \Leftrightarrow G$ este proprie si nu are poli pe axa imaginara

Fie $\gamma > 0, G(s) = \begin{bmatrix} A & B \\ C & D \end{bmatrix}$ cu $\Lambda(A) \bigcap \mathbb{C}_0 = \{\emptyset\}$ si

$$\begin{cases} R_\gamma = \begin{bmatrix} A + \mathrm{BR}_\gamma^{-1} D^T C & \mathrm{BR}_\gamma^{-1} B^T \\ -C^T\left(I + \mathrm{DR}_\gamma^{-1} D^T\right) C & -\left(A + \mathrm{BR}_\gamma^{-1} D^T C\right)^T \end{bmatrix} \\ R_\gamma = \gamma^2 I - D^T D \end{cases}$$ avem $||G||_\infty < \gamma \Leftrightarrow R_\gamma > 0$ si $\Lambda(H_\gamma) \bigcap \mathbb{C}_0 = \emptyset$

<u>Acest rezultat are loc in cazul generic al sistemeor MIMO</u>

Matricea $H_\gamma \in \mathbb{R}^{2\text{nx}2\text{n}}$ este o matrice de tip Hamilton.

Ce este o matrice Hamilton?

O matrice hamilton este o matrice care are simetrie a spectrului in raport cu axa imaginara, adica daca avem λ, avem si $\overline{\lambda}, -\lambda$ si $-\overline{\lambda}$. Mai exact, satisface $(\mathrm{JH}_\gamma)^T = \mathrm{JH}_\gamma$, unde $J = \begin{bmatrix} 0_n & I_n \\ -I_n & 0_n \end{bmatrix}$ si se numeste matrice antisimetrica

Lema de reala marginire

Nu ai cum algotritmic sa faci in numar finit de pasi sa calculezi norma infinit

```
H_gam = [G_ss.A + G_ss.B * G_ss.D' * G_ss.C / 3, G_ss.B * eye(2) * G_ss.B' / 3;
    -G_ss.C' * (eye(2) + G_ss.D * eye(2) * G_ss.D' / 3) * G_ss.C, -(G_ss.A + G_ss.B
* G_ss.D' * G_ss.C / 3)']
```

```
H_gam = 4×4
   -0.6667    0.3333    1.3333         0
    0.3333   -0.6667         0    1.3333
   -0.6667   -0.6667    0.6667   -0.3333
   -0.6667   -0.6667   -0.3333    0.6667
```

```
eig(H_gam)
```

```
ans = 4×1 complex
  -1.0000 + 0.0000i
```

```
  -0.0000 + 1.2910i
  -0.0000 - 1.2910i
   1.0000 + 0.0000i
```

Norma 2

Pentru **Matricea de Transfer (cazul MIMO)** definim $||G||_2 := \left\{\frac{1}{2\pi}\int_{-\infty}^{\infty} \mathrm{tr}\left[G^{\sim}(\mathrm{jw})G(\mathrm{jw})\right]\mathrm{dw}\right\}^{\frac{1}{2}}$ care se numeste $\mathscr{L}_2$

$$||G||_2 < \infty \Leftrightarrow G \in \mathscr{R}\mathscr{L}_2(s)^{\mathrm{pxm}} \Leftrightarrow \begin{cases} G(s) \text{ nu are poli pe } \mathbb{C}_0 \\ G(\infty) = 0, \text{ adica este strict proprie} \end{cases}$$

S-ar putea rezolva norma 2 folosind **Teoria Reziduurilor**, cel mai bine folosim unele formule pe stare (Lyapunov)

```
norm(1 / (s - 1), 2)
```

```
Warning: The H2 norm is infinite because the system is unstable.
ans =
Inf
```

Asta calculeaza H_2, nu L_2

```
help stabsep
```

```
--- help for DynamicSystem/stabsep ---

 DynamicSystem/stabsep - Stable-unstable decomposition
    This MATLAB function decomposes the linear time-invariant (LTI) model G
    into its stable and unstable parts.

    Syntax
      [G1,G2] = stabsep(G)
      [G1,G2] = stabsep(G,Offset)
      [G1,G2] = stabsep(G,___,Name=Value)
      [G1,G2,info] = stabsep(___)

    Input Arguments
      G - Dynamic system to decompose
        numeric LTI model
      Offset - Offset for stable/unstable boundary
        0 (default) | scalar

    Name-Value Arguments
      Focus - Focus of decomposition
        "stable" (default) | "unstable"
      SepTol - Accuracy loss factor
        10 (default) | positive scalar

    Output Arguments
      G1 - Stable part of decomposition
        numeric LTI model
      G2 - Unstable part of decomposition
        numeric LTI model
      info - Additional information
        structure | []

    Examples
      Stable-Unstable Decomposition for Zero-Pole-Gain Model
```

```
See also modalsep, freqsep

Introduced in Control System Toolbox before R2006a
Documentation for DynamicSystem/stabsep
```

```
G_ss = ss(G)
```

```
G_ss =

  A =
       x1  x2
   x1  -1   0
   x2   0  -1

  B =
       u1  u2
   x1   2   0
   x2   0   2

  C =
        x1   x2
   y1  0.5  0.5
   y2  0.5  0.5

  D =
       u1  u2
   y1   0   0
   y2   0   0

Continuous-time state-space model.
Model Properties
```

```
norm(G_ss, 2)
```

```
ans =
1.4142
```

```
% aproximativ sqrt(2)
```

Presupunem ca sistemul este luat aleator si este reprezentat intr-o stare minimala. Norma lui 2 este finita $\Leftrightarrow \begin{cases} D = 0 \\ A \text{ este dihotomica} \end{cases}$. In acest sens, sistemul se poate aduce la forma $G(s) = G_s(s) + G_a(s)$, unde $\begin{cases} G_s(s) \text{ are polii in } \mathbb{C}_- \text{ (este stabil)} \\ G_a(s) \text{ are polii in } \mathbb{C}_+ \text{(este antistabil)} \end{cases}$. Atunci are loc rezultatul: $||G||_2^2 = ||G_s||_2^2 + ||G_a||_2^2$.

O mica observatie: Stim ca G_s si G_a sunt ortogonale si ca $||\widetilde{G}||_2 = ||G||_2$. In acest sens, daca G_a este antistabil, asta inseamna ca $\widetilde{G_a}(s) = G_a^T(-s)$ care este stabil. Asadar, putem rescrie egalitatea in felul irmator:

$||G||_2^2 = ||G_s||_2^2 + ||\widetilde{G}_a||_2^2$ si este suma de 2 stabile

Acum trebuie calculate cele 2 norme. Cum facem asta? Uite aici:

Pentru A stabil, norma 2 se calculeaza:

$$||G||_2 = [\mathrm{tr}(B^T \mathrm{QB})]^{\frac{1}{2}} = [\mathrm{tr}(\mathrm{CPC}^T)]^{\frac{1}{2}}, \text{unde } P \text{ si } Q \text{ sunt solutiile unice ale ecuatiilor Lyapunov}$$

$$\begin{cases} \mathrm{AP} + \mathrm{PA}^T + \mathrm{BB}^T = 0 \\ A^T Q + \mathrm{QA} + C^T C = 0 \end{cases}$$

Pentru A instabil, norma 2 se calculeaza:

$$||G||_2 = \left[\mathrm{tr}\left(B^T \widehat{Q} B\right)\right]^{\frac{1}{2}} = \left[\mathrm{tr}\left(C \widehat{P} C^T\right)\right]^{\frac{1}{2}}, \text{unde } \widehat{P} \text{ si } \widehat{Q} \text{ sunt solutiile unice ale ecuatiilor Lyapunov}$$

$$\begin{cases} A\widehat{P} + \widehat{P}A^T - \mathrm{BB}^T = 0 \\ A^T \widehat{Q} + \widehat{Q}A - C^T C = 0 \end{cases}$$, unde tr(A) reprezinta suma elementelor de pe diagonala principala

```
help lyap
```

```
lyap - Solve continuous-time Lyapunov equation
   Use lyap to solve the special and general forms of the Lyapunov
   equation.

   Syntax
     X = lyap(A,Q)
     X = lyap(A,B,C)
     X = lyap(A,Q,[],E)

   Input Arguments
     A - Input matrices
       matrices
     Q - Input matrices
       matrices
     B - Input matrices
       matrices
     C - Input matrices
       matrices
     E - Input matrices
       matrices

   Output Arguments
     X - Solution
       matrix

   Examples
     Solve Lyapunov Equation
     Solve Sylvester Equation
     Solve Generalized Lyapunov Equation

   See also covar, dlyap

   Introduced in Control System Toolbox before R2006a
   Documentation for lyap
```

```
P = lyap(G_ss.A, G_ss.B * G_ss.B')
```

```
P = 2×2
     2     0
     0     2
```

```
Q = lyap(G_ss.A', G_ss.C' * G_ss.C)
```

```
Q = 2×2
    0.2500    0.2500
    0.2500    0.2500
```

```
G_ss.A * P + P * G_ss.A' + G_ss.B * G_ss.B'
```

```
ans = 2×2
     0     0
     0     0
```

```
G_ss.A' * Q + Q * G_ss.A + G_ss.C' * G_ss.C
```

```
ans = 2×2
     0     0
     0     0
```

```
rez = sqrt(trace(G_ss.B' * Q * G_ss.B))
```

```
rez =
1.4142
```

```
rez1 = sqrt(trace(G_ss.C * P * G_ss.C'))
```

```
rez1 =
1.4142
```

```
T = T + T' + eye(2)
```

```
T =

  A =
             x1       x2       x3       x4       x5       x6
   x1   0.5377   0.8622  -0.4336        0        0        0
   x2    1.834   0.3188   0.3426        0        0        0
   x3   -2.259   -1.308    3.578        0        0        0
   x4        0        0        0  -0.5377   -1.834    2.259
   x5        0        0        0  -0.8622  -0.3188    1.308
   x6        0        0        0   0.4336  -0.3426   -3.578

  B =
             u1        u2
   x1     2.769    0.7254
   x2     -1.35  -0.06305
   x3     3.035    0.7147
   x4     0.205    0.1241
   x5     -1.49    -1.409
   x6    -1.417   -0.6715
```

```
  C =
              x1        x2        x3        x4        x5        x6
   y1    -0.205      1.49     1.417     2.769     -1.35     3.035
   y2   -0.1241     1.409    0.6715    0.7254  -0.06305    0.7147

  D =
       u1  u2
   y1   3   0
   y2   0   3

Continuous-time state-space model.
Model Properties
```

```
eig(T)
```

```
ans = 6×1
    3.8142
   -0.8472
    1.4678
    0.8472
   -1.4678
   -3.8142
```

```
help stabsep
```

```
--- help for DynamicSystem/stabsep ---

 DynamicSystem/stabsep - Stable-unstable decomposition
    This MATLAB function decomposes the linear time-invariant (LTI) model G
    into its stable and unstable parts.

    Syntax
      [G1,G2] = stabsep(G)
      [G1,G2] = stabsep(G,Offset)
      [G1,G2] = stabsep(G,___,Name=Value)
      [G1,G2,info] = stabsep(___)

    Input Arguments
      G - Dynamic system to decompose
        numeric LTI model
      Offset - Offset for stable/unstable boundary
        0 (default) | scalar

    Name-Value Arguments
      Focus - Focus of decomposition
        "stable" (default) | "unstable"
      SepTol - Accuracy loss factor
        10 (default) | positive scalar

    Output Arguments
      G1 - Stable part of decomposition
        numeric LTI model
      G2 - Unstable part of decomposition
        numeric LTI model
      info - Additional information
        structure | []

    Examples
      Stable-Unstable Decomposition for Zero-Pole-Gain Model

    See also modalsep, freqsep
```

```
    Introduced in Control System Toolbox before R2006a
    Documentation for DynamicSystem/stabsep
```

```
[T_st, T_a] = stabsep(T)
```

```
T_st =

  A =
            x1       x2       x3
   x1  -0.8472        0        0
   x2        0   -1.468    1.403
   x3        0        0   -3.814

  B =
            u1       u2
   x1    -2.56   -0.555
   x2   -1.143   -1.001
   x3   -1.448  -0.7118

  C =
           x1      x2      x3
   y1   2.028   2.772   2.587
   y2   1.885   0.945  0.5635

  D =
       u1  u2
   y1   3   0
   y2   0   3

Continuous-time state-space model.
Model Properties

T_a =

  A =
           x1      x2      x3
   x1   3.814   1.403       0
   x2       0   1.468       0
   x3       0       0  0.8472

  B =
            u1       u2
   x1   -1.294  -0.2817
   x2    1.386   0.4725
   x3    1.014   0.9424

  C =
           x1      x2      x3
   y1  -2.895   2.286   5.119
   y2  -1.424   2.002    1.11

  D =
       u1  u2
   y1   0   0
   y2   0   0

Continuous-time state-space model.
Model Properties
```

Cateva surse:

https://www.mathworks.com/help/robust/gs/interpretation-of-h-infinity-norm.html

https://en.wikipedia.org/wiki/Hamiltonian_matrix