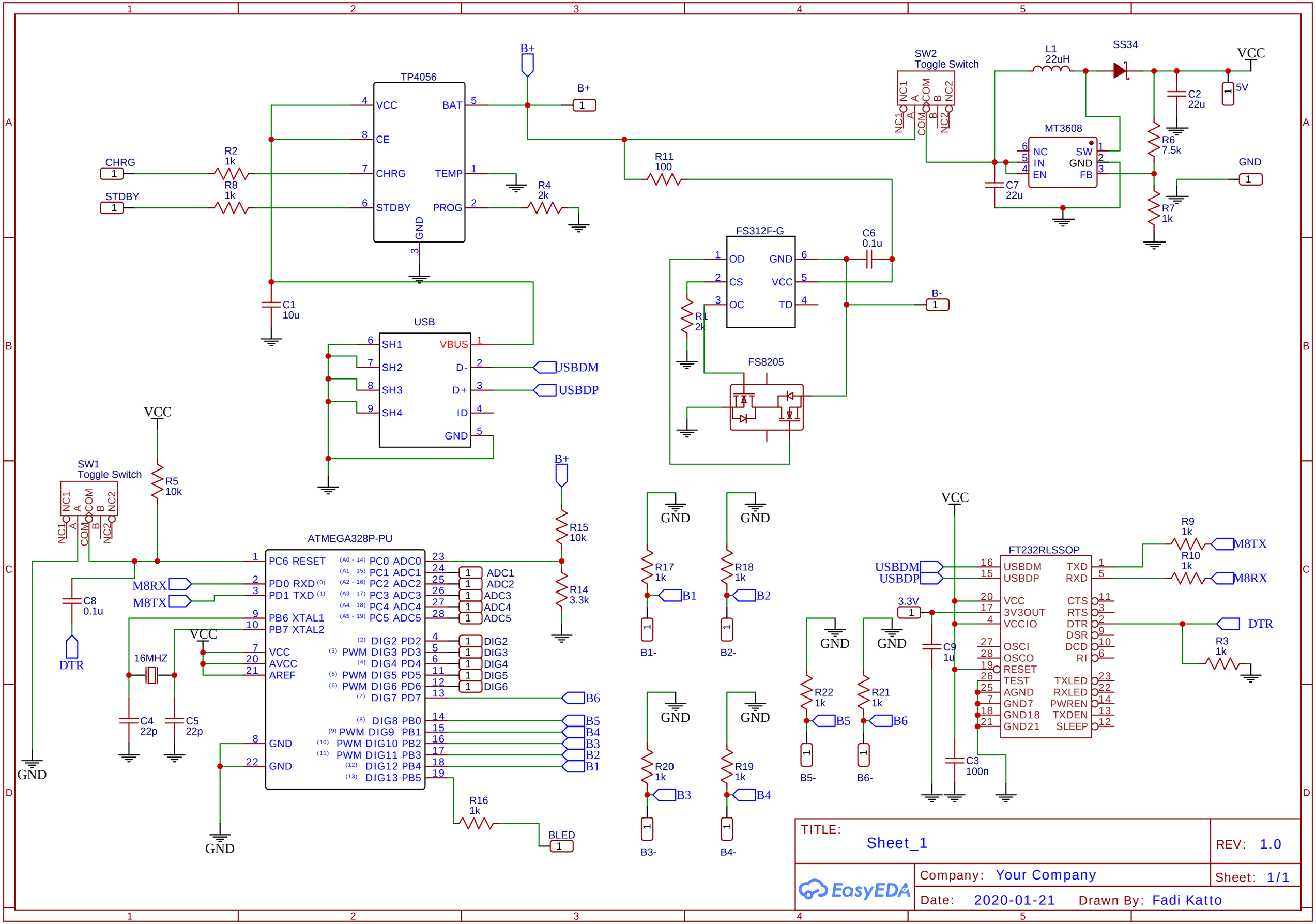
TP4056
VCC
CE
CHRG
STDBY
BAT
TEMP
PROG
GND
B+
CHRG
STDBY
R2 1k
R8 1k
R4 2k
R11 100
C1 10u
SW2 Toggle Switch
NC1 A COM B NC2
L1 22uH
SS34
VCC
5V
C2 22u
MT3608
NC IN EN
SW GND FB
C7 22u
R6 7.5k
R7 1k
GND
FS312F-G
OD CS OC
GND VCC TD
C6 0.1u
B-
R1 2k
FS8205
USB
SH1 SH2 SH3 SH4
VBUS D- D+ ID GND
USBDM
USBDP
VCC
SW1 Toggle Switch
R5 10k
B+
R15 10k
R14 3.3k
ATMEGA328P-PU
PC6 RESET
PD0 RXD
PD1 TXD
PB6 XTAL1
PB7 XTAL2
VCC
AVCC
AREF
GND
PC0 ADC0
PC1 ADC1
PC2 ADC2
PC3 ADC3
PC4 ADC4
PC5 ADC5
DIG2 PD2
PWM DIG3 PD3
DIG4 PD4
PWM DIG5 PD5
PWM DIG6 PD6
DIG7 PD7
DIG8 PB0
PWM DIG9 PB1
PWM DIG10 PB2
PWM DIG11 PB3
DIG12 PB4
DIG13 PB5
M8RX
M8TX
C8 0.1u
DTR
16MHZ
C4 22p
C5 22p
R16 1k
BLED
R17 1k
R18 1k
R20 1k
R19 1k
B1
B2
B3
B4
B1-
B2-
B3-
B4-
R22 1k
R21 1k
B5
B6
B5-
B6-
FT232RLSSOP
USBDM
USBDP
VCC
3V3OUT
VCCIO
OSCI
OSCO
RESET
TEST
AGND
GND7
GND18
GND21
TXD
RXD
CTS
RTS
DTR
DSR
DCD
RI
TXLED
RXLED
PWREN
TXDEN
SLEEP
3.3V
C9 1u
C3 100n
R9 1k
R10 1k
M8TX
M8RX
R3 1k
TITLE:
Sheet_1
REV: 1.0
Company: Your Company
Sheet: 1/1
Date: 2020-01-21
Drawn By: Fadi Katto
EasyEDA