Integrated Security Mechanisms for Weight Protection in Memristive Crossbar Arrays

ASAP 2025

Muhammad Faheemur Rahman, Prof. Wayne Burleson
Electrical and Computer Engineering, UMass Amherst

1. Introduction

Memristive Crossbar Arrays play a crucial role in enabling in-memory computing. They:

- allow parallel analog computations directly within memory
- are well-suited for ML, Neural Networks, and Scientific Computing
- use Kirchhoff's Current Law and Ohm's Law to perform analog Vector Matrix Multiplication (VMM)
- execute faster computation than traditional digital methods
- store the synaptic weights of a neural network in their conductance states

2. Problem Statement

- Non-volatile memristors are vulnerable to security threats as they retain state even without power
- Adversaries may extract stored weights, which are often outcomes of expensive and time-intensive neural network training and data-sets
- Can lead to IP theft, privacy breaches, unauthorized model replication, or model poisoning

3. Threat Model & Security Goals

i. Weight obfuscation threat model:
   - Attacker cannot physically probe or reverse-engineer the array
   - At run-time, attacker can control row inputs (e.g., voltages) but NOT the corresponding output (e.g., column currents) of the same layer

ii. Weight watermarking threat model:
   - Watermark weights and trigger pattern are secrets

Our security goals include:

- Weight confidentiality: Prevent reconstruction of original weight matrix
- Watermark protection: Prevent detection or misuse of watermark columns without internal access or secret key

4. Methodology

- We propose two security mechanisms:
  - Keyed Permutor
  - Watermark Protection Columns
- **Keyed Permutor:** Utilizes a keyed decoder to obfuscate the mapping between input signals and crossbar rows to safeguard Weights
  - Many permutations are explored
  - keys are securely stored outside the crossbar array, ensuring that attackers have no access to the permutation keys
- **Watermark Protection Columns:** Model is retrained to include watermarks to establish verifiable ownership. Two extra columns detect watermark

5. Memristive Crossbar Array Design

- Large 256 by 128 crossbar array is implemented
- 45nm CMOS foundry technology node is deployed, with additional scaling to 22nm and 7nm using PTM models
- MNIST and complex larger RF dataset–LoRa is used
  - LoRa RF Dataset is a collection of radio frequency signals captured from devices that use LoRa (Long Range) technology
- The interconnect wire model is based on the lower metal layers (M1/M2)
- V_{DD} ranges from 0.7 V to 1.2 V, depending on the technology node
- Input signals are scaled to meet logic-level requirements of the transistors

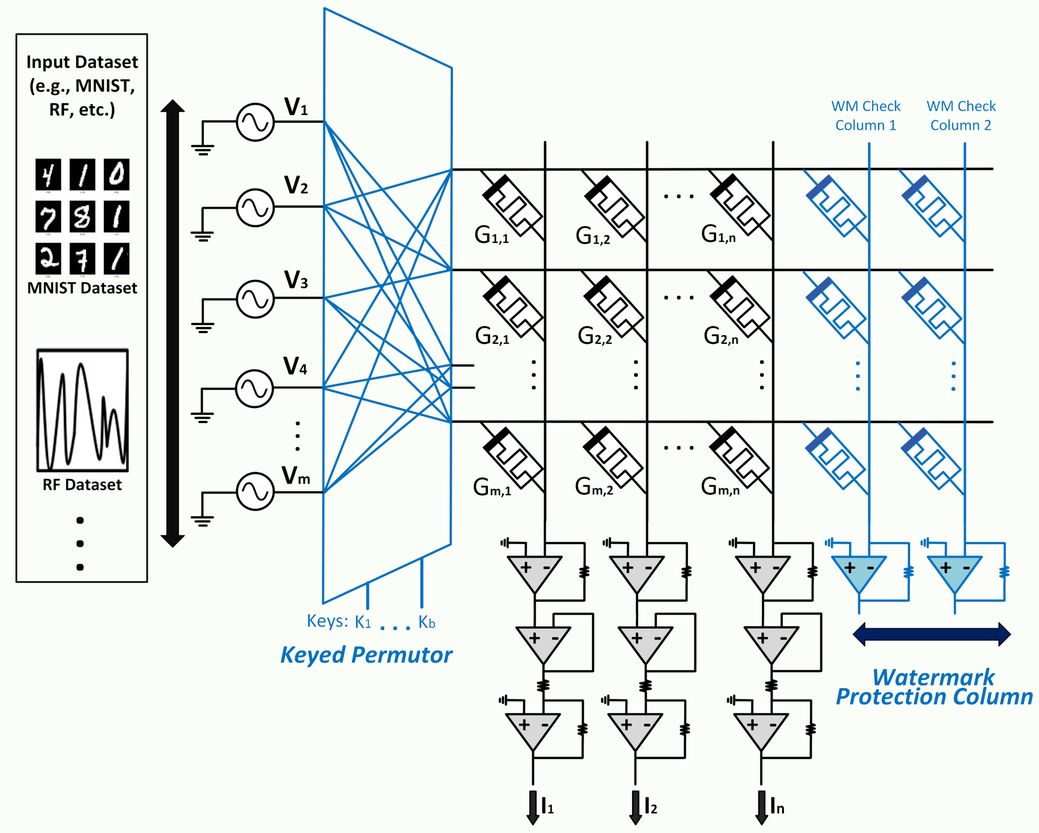

Fig: Circuit Diagram of a Memristive Crossbar Array with Two Proposed Security Mechanisms and Input Signals from the RF/MNIST Dataset

- Vector Matrix Multiplication (VMM): $[V1 \quad V2] \bullet \begin{bmatrix} G11 & G12 & G13 \\ G21 & G22 & G23 \end{bmatrix} = [I1 \quad I2 \quad I3]$
- Analog VMM with in-memory computing: $I_j = \sum_i V_i \, G_{i,j}$

6. Keyed Permutor Scheme Comparison (256×128)

Security Case	Extra rows	Permutor Fan-in	Key space	Area Overhead
1 Dummy	1	2	n = 256 = 2^8	~0.39%
Pairwise Swap	0	2	$(m!)^{\frac{n}{m}} = (2!)^{\frac{256}{2}} = 2^{128}$	~2.34%
Triplet Swap	0	3	$(m!)^{\frac{n}{m}} = (3!)^{\frac{256}{3}} \approx 2^{219}$	~4.67%
Pairwise Swap & 1 Dummy per group	$\frac{n}{m} = \frac{256}{2}$ =128	3	$(m+1)!^{\frac{n}{m}} = (3!)^{\frac{256}{2}} \approx 2^{329}$	~50-53%
Triplet Swap & 1 Dummy per group	$\frac{n}{m} = \frac{256}{3}$ = 85	$(m+1)$	$(m+1)!^{\frac{n}{m}} = (4!)^{\frac{256}{3}} \approx 2^{390}$	~37.2%

- n = 256 real rows, m = group size (2 for pairwise, 3 for triplet)
- Area overhead based on added transistors. MUX = *m* Memristor Cells
- Permutation with 40 row swaps results in severe degradation to ML Accuracy (from 90% to 5%)

7. Simulation Results & Findings

- Triplet swap is implemented in the Keyed Permutor, enabling longer keys (length 219) with only 4.67% area overhead
- Permutation & Watermark overhead:
  - Area and Power ∝ Rows
  - Delay ∝ $\frac{1}{\text{Columns}}$
- Overhead could be a problem for a smaller array

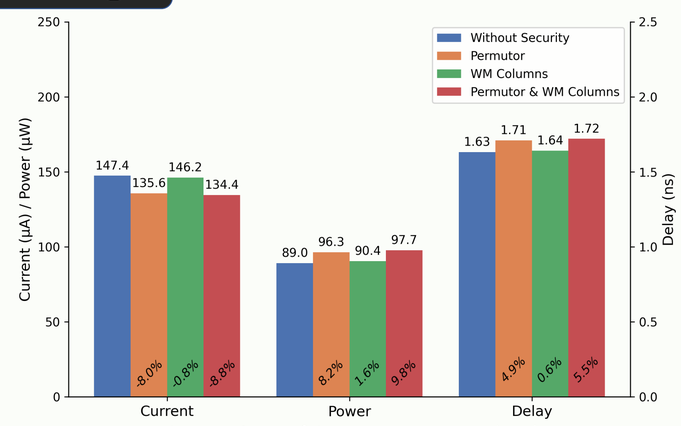

Comparison of Current, Power and Delay for the proposed Security Aspects

- In terms of PPA analysis (Power, Performance (Delay), and Area), the overhead is below 10% when a large 256×128 array is deployed

8. Conclusion & Future Work

- Minimal overhead (below 10%) for integrated security features when using a large 256 by 128 array
- Optimization of the Keyed Permutor and peripheral circuits
- Implementation on larger array
- Optimization and Integration on Physical Hardware

Acknowledgements: The research was sponsored by the Army Research Laboratory and was accomplished under Cooperative Agreement Number W911NF-23-2-0014. (ARL-KRI FREEDOM Project: *Analog Edge Processor with Embedded Security for Low-power Low-latency Sensing Applications*)

References

[1] W. Lillis, M. C. Hoffing, and W. Burleson, "Survey of Security Issues in Memristor-Based Machine Learning Accelerators for RF Analysis," Chips, vol. 3, no. 2, pp. 196–215, Jun. 2024, doi: https://doi.org/10.3390/chips3020009.
[2] F. Aguirre et al., "Hardware implementation of memristor-based artificial neural networks," Nature Communications, vol. 15, no. 1, p. 1974, Mar. 2024, doi: https://doi.org/10.1038/s41467-024-45670-9.
[3] S. Huang, X. Peng, H. Jiang, Y. Luo, and S. Yu, "New Security Challenges on Machine Learning Inference Engine: Chip Cloning and Model Reverse Engineering," arXiv.org, 2020, doi: https://doi.org/10.48550/arXiv.2003.09739.
[4] Guanxiong Shen, Junqing Zhang, Alan Marshall, February 3, 2022, "LoRa_RFFI_dataset", IEEE Dataport, doi: https://dx.doi.org/10.21227/qqt4-kz19.