MCT- INDUSTRIAL AUTOMATION

Semester Project Report

Part Bonding Application
Implemented on AB PLC and Festo ElectropneumaticTrainer

SUBMITTED BY:

MUHAMMAD	**2022-MC-48**
MOGHEES	**2022-MC-52**
AZMEER	**2022-MC-53**
FAIQ AHMED ZIA	**2022-MC-59**

SUBMITTED TO:

MUHAMMAD RZI ABBAS

DEPARTMENT OF MECHATRONICS AND CONTROL ENGINEERING

UNIVERSITY OF ENGINEERING AND TECHNOLOGY, LAHORE

Semester Project : Part Bonding Application

Implementation on Allen-Bradley PLC and Festo Electropneumatic Trainer

1 Abstract

This project presents the **design, implementation, and testing** of an automated part bonding application using an **Allen-Bradley (AB) Programmable Logic Controller (PLC)** integrated with a Festo electropneumatic trainer. The objective of the system is to automate the pressing operation required to bond two plastic parts after manual application of bonding paste by an operator. The system ensures that a defined force is applied for a precise duration while maintaining high levels of **operational safety and reliability**.

A capacitive proximity sensor is used to detect the presence of the bonded parts under the pneumatic press. Upon detection and a valid operator command through a normally open momentary push button, the pneumatic cylinder extends to press the parts together. An inductive proximity sensor confirms full cylinder extension, after which a **5-second bonding timer** is initiated. Once the bonding time elapses, the cylinder automatically retracts, and a counter logs the completion of one bonded part.

The system incorporates advanced control logic to handle batch processing and fault conditions. After processing **five parts**, the system enters a mandatory **20-second rest period** during which further operation is inhibited. Safety features include an **Emergency Stop (E-Stop)** and a **cylinder jam detection alarm** that activates if the cylinder remains extended for more than **6 seconds**. In the event of a fault or emergency, the system requires a deliberate reset using a latching start/stop switch to resume operation.

The implementation demonstrates effective use of **PLC timers, counters, and safety logic**, fulfilling the learning outcomes related to **industrial automation and control system design**.

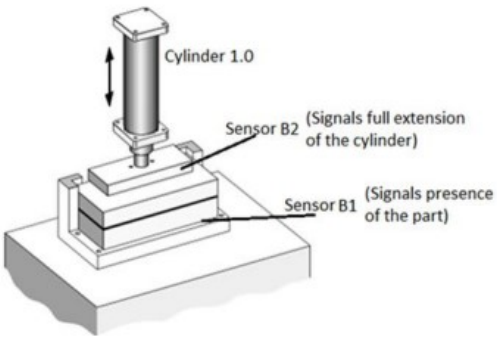

Figure 1: schematic diagram

2 System Description

The bonding process consists of both manual and automated steps. Initially, the operator applies bonding paste to the plastic parts and places them together under the pneumatic press. Once the part presence is detected and the system is enabled, the PLC controls the pneumatic press cycle.

The system is designed to ensure that:

- The press operates only when a part is present.
- The bonding force is applied for exactly 5 seconds.
- Production is paused after a defined batch size.
- Unsafe or abnormal conditions immediately stop the process.

3 Input / Output (I/O) Table

3.1 Digital Inputs

Address	Device	Type	Description
I1:1/0	Inductive Proximity Sensor	Digital Sensor	Detects cylinder extension
I1:1/1	Capacitive switch	NO Momentary	Detects part presence
I1:1/2	Emergency Stop (E-Stop)	NC Momentary	Immediate system stop
I1:1/3	Cycle Start Push Button	NC Momentary	Initiates press cycle
I1:1/4	Start/Stop Switch	NO Latching	Enables or disables system operation

Table 1: Digital Inputs

3.2 Digital Outputs

Address	Device	Type	Description
O0:2/0	Cylinder	Digital Output	Extends pneumatic cylinder
O0:2/1	LED	Blinking LED	LED turns on with alarm
O0:2/2	Alarm Indicator	Digital Output	Indicates jam condition

Table 2: Digital Outputs

3.3 Internal PLC Elements

Element	Type	Function
T4:0	Timer (TON)	5-second bonding timer
T4:1	Timer (TON)	20-second rest timer
T4:2	Timer (TON)	6-second jam detection timer
C5:0	Counter (CTU)	Counts processed parts
B3:x	Control Bits	System enable and fault logic

Table 3: Internal PLC Elements

4 State Diagram

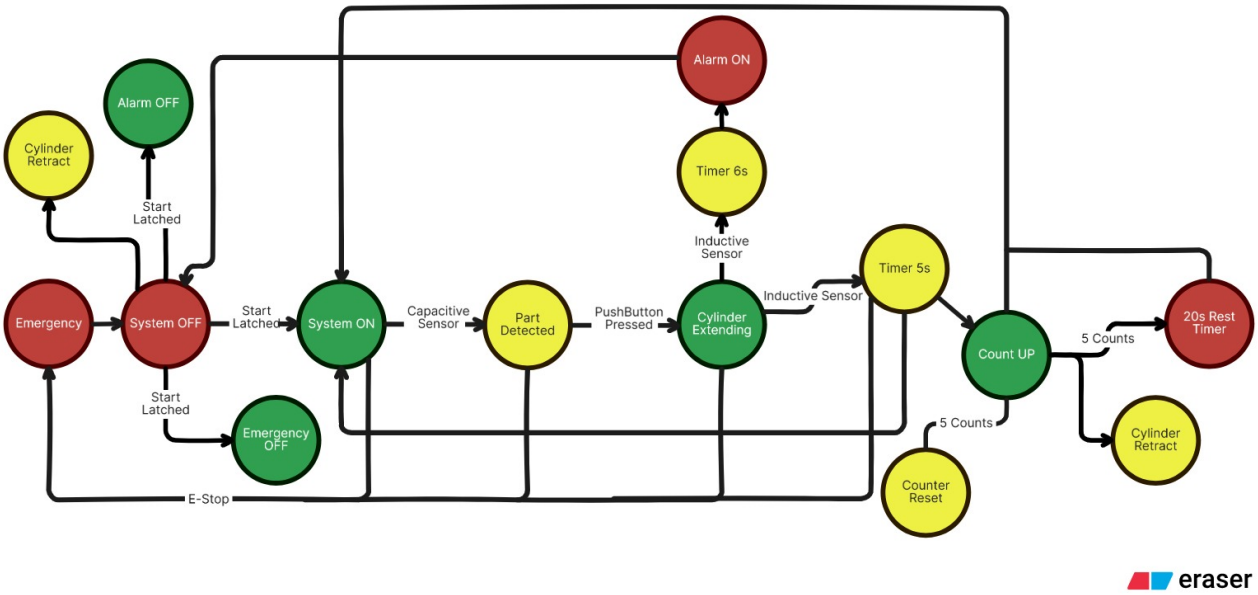

Figure 2: STATE DIAGRAM

5 Control Logic and Operation Sequence

The operational sequence of the system is described below:

1. System is enabled using the latching start/stop switch.
2. Capacitive sensor detects part presence.
3. Operator presses the cycle start push button.
4. PLC energizes the solenoid valve to extend the cylinder.
5. Inductive sensor confirms full extension.
6. 5-second bonding timer starts.
7. Cylinder retracts automatically after bonding.
8. Part counter increments.
9. After five parts, system enters 20-second rest mode.
10. System resumes operation after rest period.

6 Alarm and Safety Logic

6.1 Cylinder Jam Alarm

If the pneumatic cylinder remains extended for more than 6 seconds, the jam detection timer activates a fault condition. Under this condition:

- Alarm LED starts blinking.
- All outputs are disabled.
- System enters a latched fault state.

System recovery requires resetting the start/stop switch.

6.2 Emergency Stop (E-Stop)

When the E-Stop button is pressed:

- Cylinder retracts immediately.
- All system outputs turn OFF.
- System requires manual reset.

7 Test Cases

7.1 Normal Operation Test

- Place bonded parts under press.
- Press cycle start button.
- Verify cylinder extension, bonding time, and retraction.
- Confirm counter increment.

7.2 Batch Rest Test

- Run five production cycles.
- Verify 20-second rest activation.
- Attempt start during rest and confirm no response.

7.3 Alarm Testing

Cylinder Jam Test:

- Simulate cylinder retraction failure.
- Verify alarm activation after 6 seconds.
- Confirm system shutdown.

Emergency Stop Test:

- Press E-Stop during operation.
- Verify immediate retraction and shutdown.

8 Simulation and Implementation

The PLC program was developed and tested using Allen-Bradley PLC simulation software, while pneumatic operations were validated using the Festo electropneumatic trainer. Multiple simulation runs were conducted to verify system reliability, safety logic, and batch processing functionality.

Screenshots of ladder logic diagrams, timers, counters, and simulation results can be included in this section.

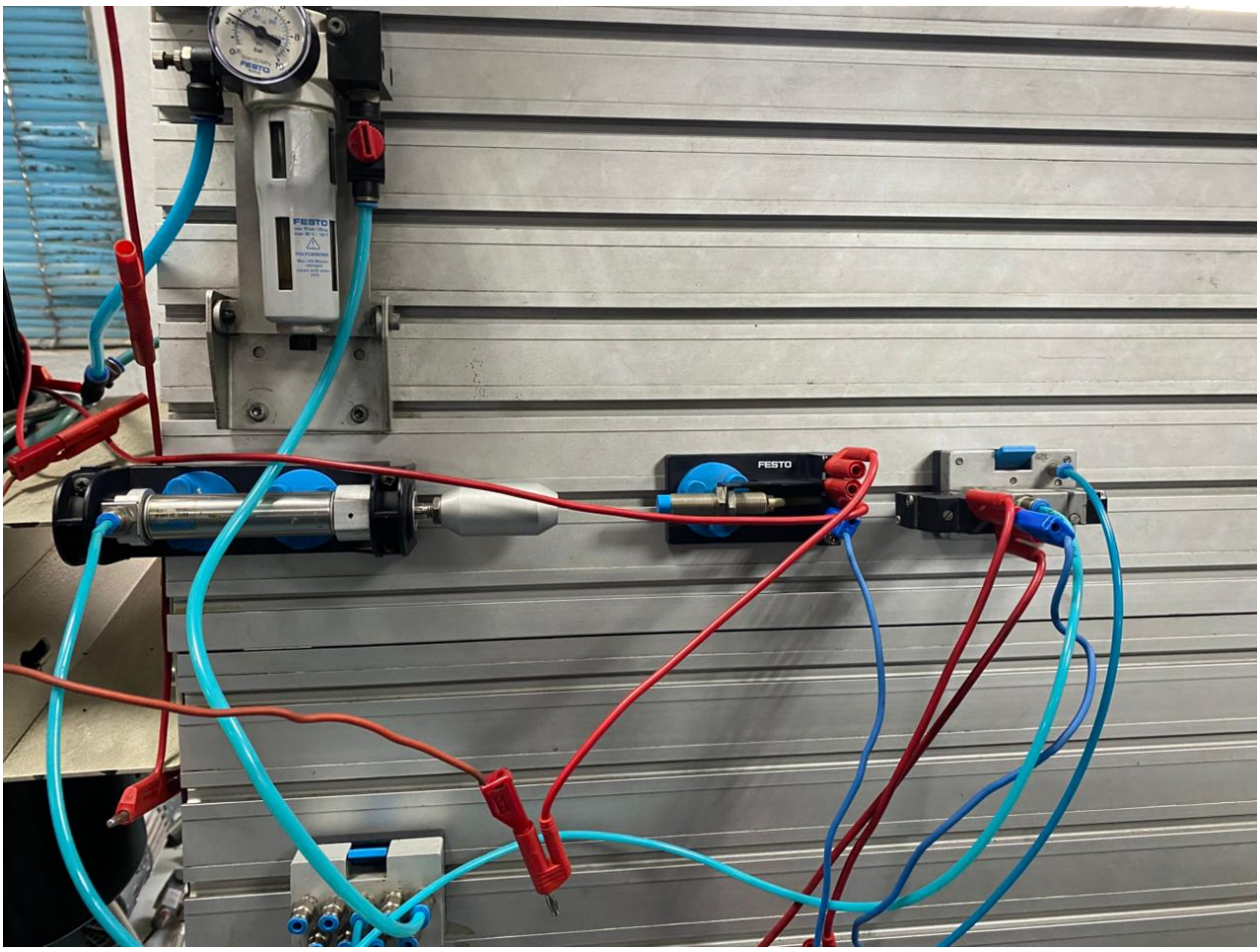

Figure 3: APPARATUS

9 Conclusion

The part bonding application successfully demonstrates a complete industrial automation solution integrating PLC control, pneumatic actuation, sensors, and safety mechanisms. The system fulfills all functional and safety requirements and effectively applies industrial automation concepts such as timers, counters, fault detection, and interlocks. This project meets the objectives of CLO3 and CLO4 by demonstrating structured control logic design, system modeling, and thorough testing procedures.

10 Program images

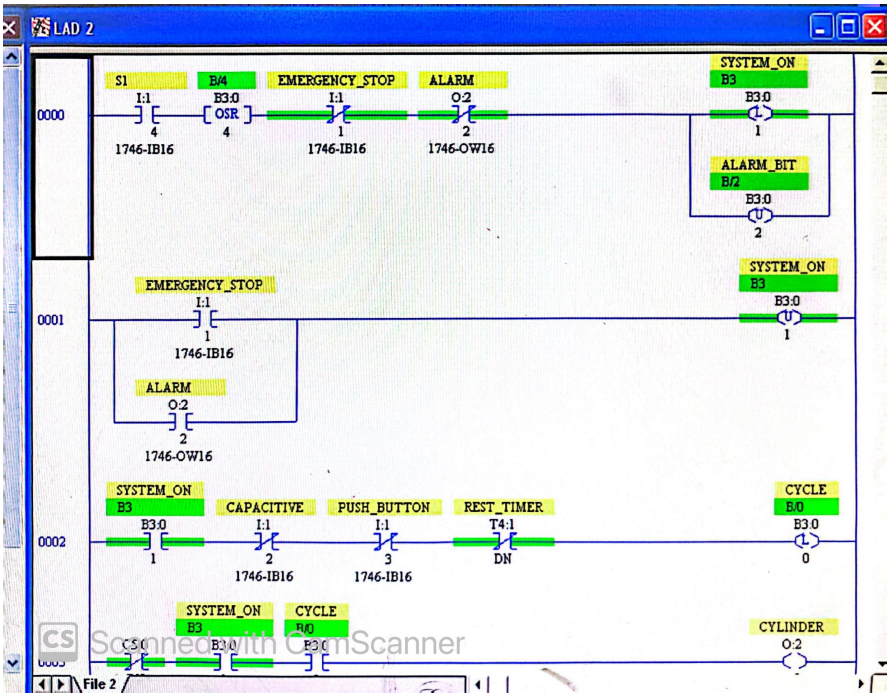

Figure 4: ladder program

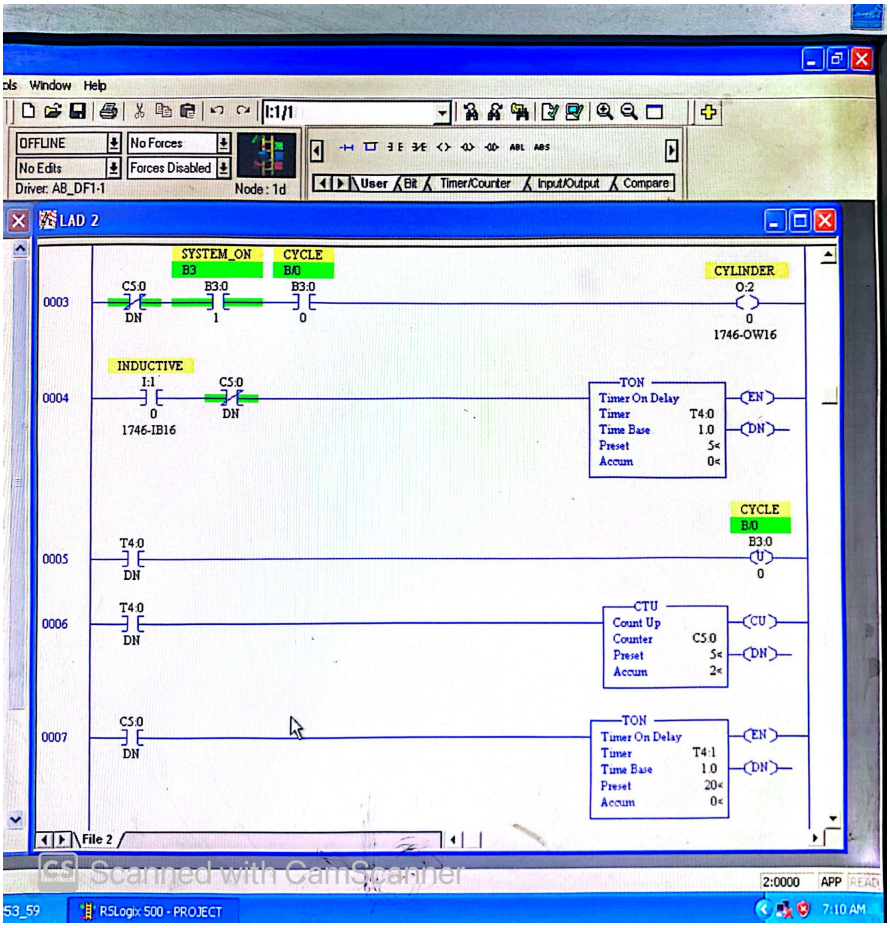

Figure 5: ladder program

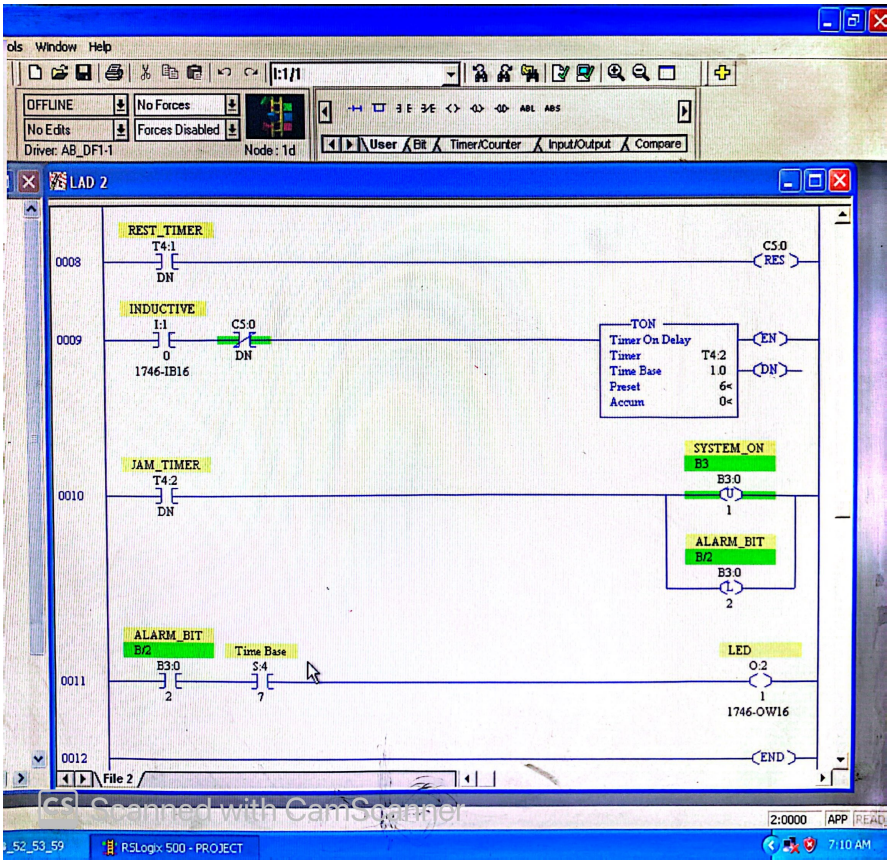

Figure 6: ladder program

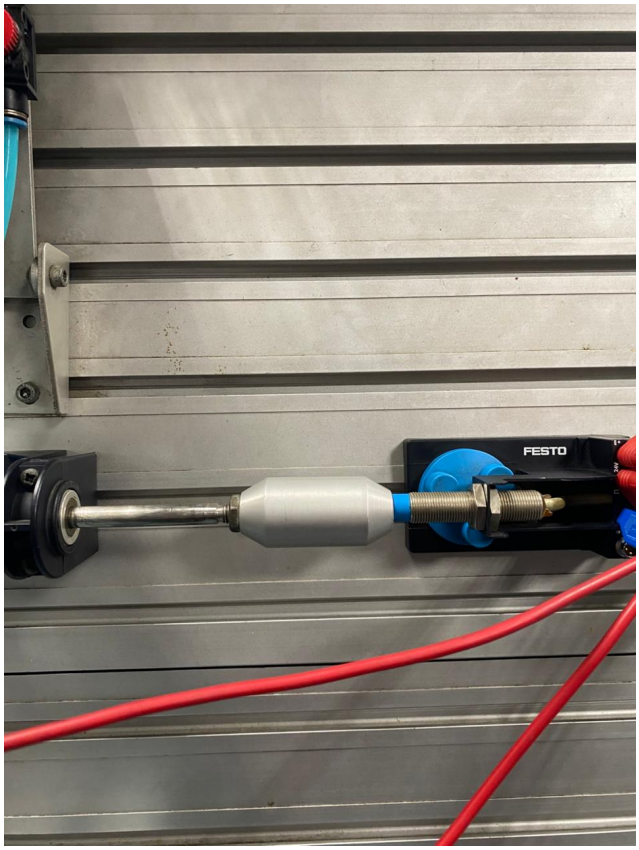

Figure 7: Cylinder extension