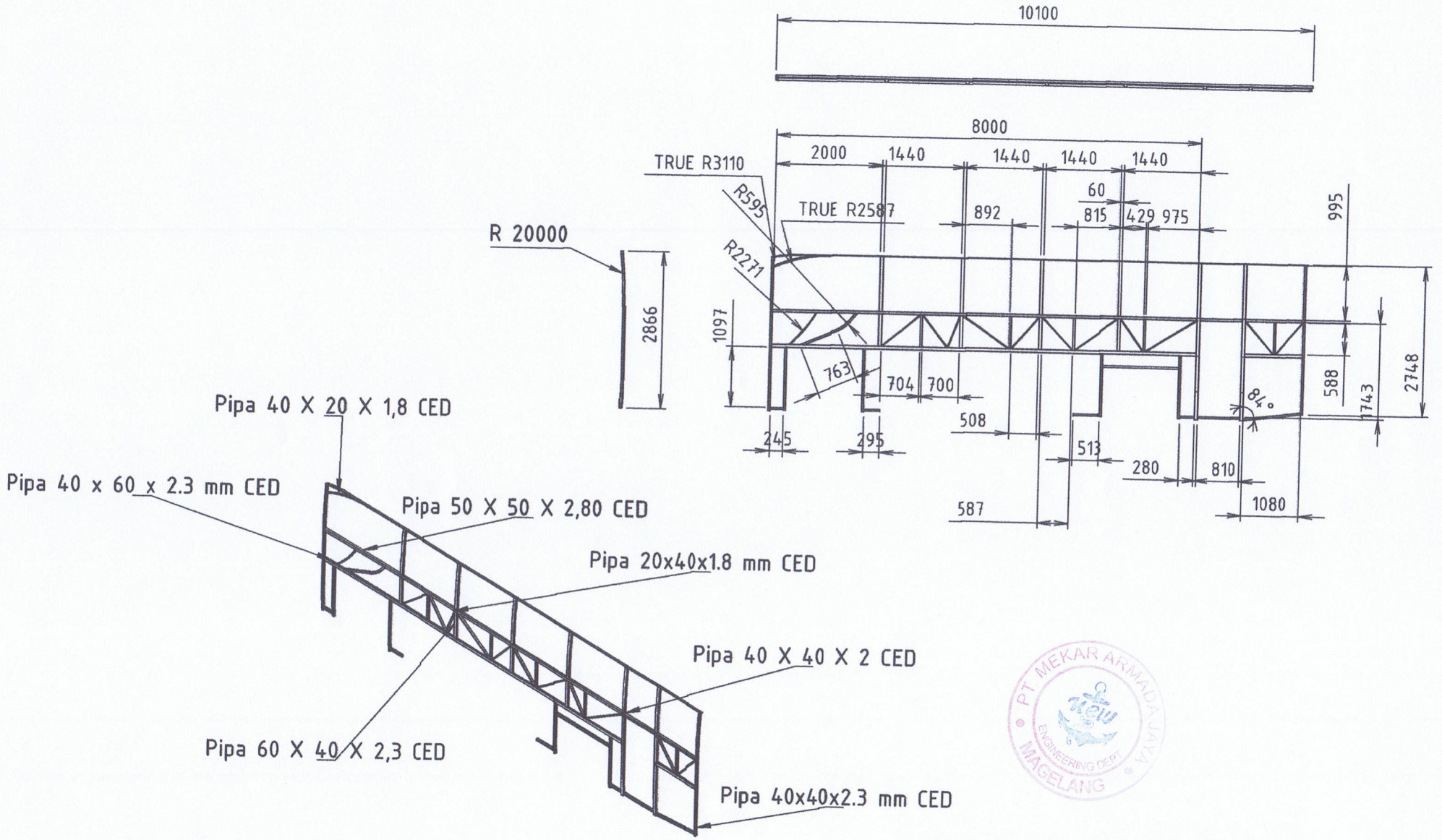

PT MEKAR ARMADA JAYA
ENGINEERING DEPT
MAGELANG

JIS B 0408 General Dimension Tolerance			
1000<	±0.5	±1.2	±3
400<... <=1000	±0.3	±0.8	±2
120<... <=400	±0.2	±0.5	±1
30<... <=120	±0.15	±0.3	±0.8
6<... <=30	±0.1	±0.2	±0.5
..... <=6	±0.05	±0.1	±0.3
Basic Dimension	Fine	Middle	Rough

SYM	REV.CONTENT	NO. DOCUMENT	DATE	REVISED BY
E				
D				
C				
B				
A				

TOLERANSI	MATERIAL :	
SURFACE FINISHING		SCALE 1 : 100
CHASIS		REV.
PART NAME : FRAME LAMBUNG KIRI		
DRWG NO : DRW.FR.BUS.BO.2022.09.18		A4
new armada		PAGE 1/1

DATE :		
RnD Staff	SPV Prod. Develop.	Manager RnD
Danny D. D.	M. Ghozi	Albertus Indra

RnD DEPARTMENT