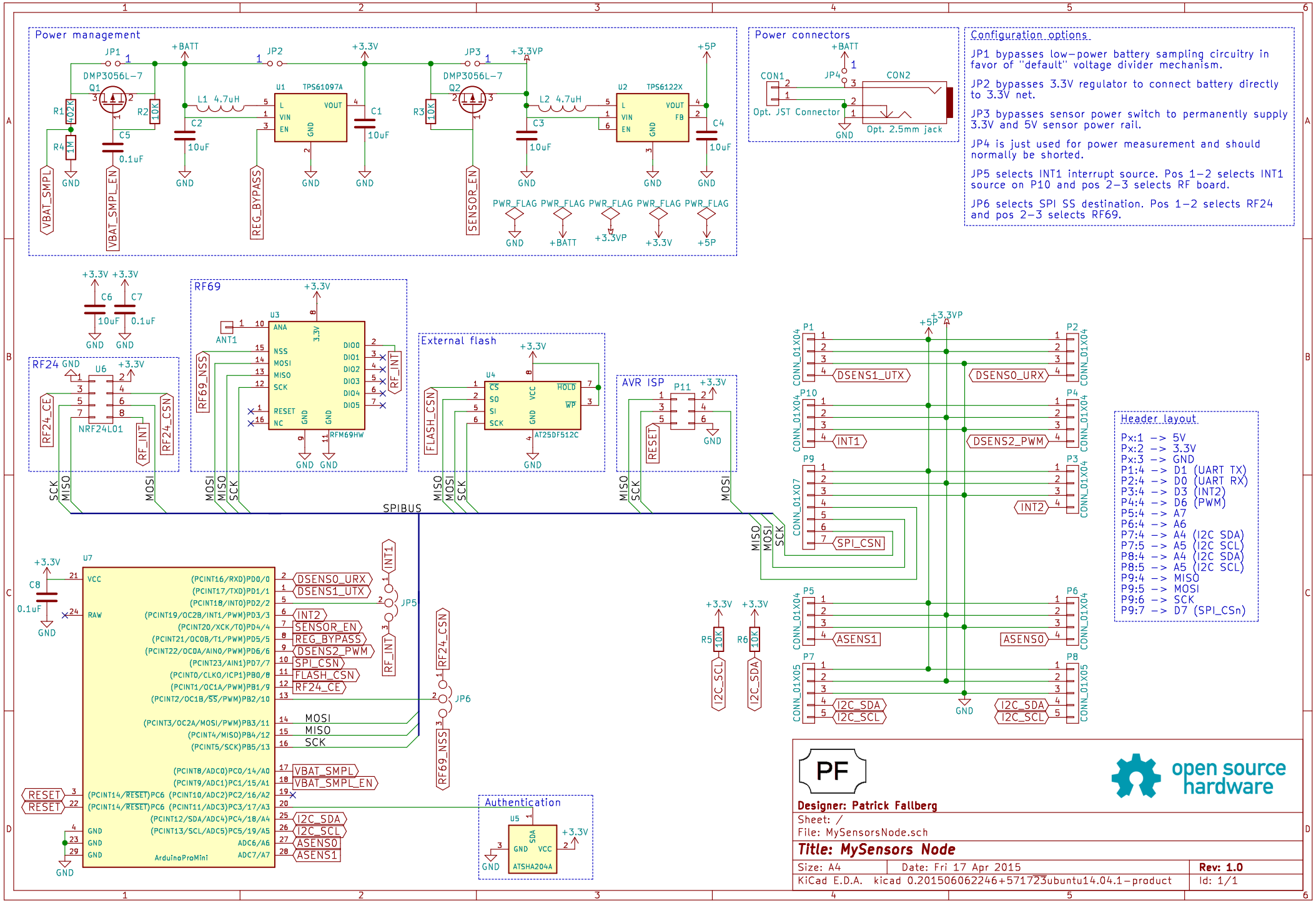
Power management
JP1
+BATT
JP2
+3.3V
JP3
+3.3VP
+5P
DMP3056L-7
Q1
Q2
R1 402K
R2 10K
R3 10K
R4 1M
C5 0.1uF
L1 4.7uH
L2 4.7uH
U1 TPS61097A
U2 TPS6122X
C1 10uF
C2 10uF
C3 10uF
C4 10uF
VBAT_SMPL
VBAT_SMPL_EN
REG_BYPASS
SENSOR_EN
PWR_FLAG
GND
Power connectors
CON1
Opt. JST Connector
CON2
Opt. 2.5mm jack
Configuration options
JP1 bypasses low-power battery sampling circuitry in favor of "default" voltage divider mechanism.
JP2 bypasses 3.3V regulator to connect battery directly to 3.3V net.
JP3 bypasses sensor power switch to permanently supply 3.3V and 5V sensor power rail.
JP4 is just used for power measurement and should normally be shorted.
JP5 selects INT1 interrupt source. Pos 1-2 selects INT1 source on P10 and pos 2-3 selects RF board.
JP6 selects SPI SS destination. Pos 1-2 selects RF24 and pos 2-3 selects RF69.
C6 10uF
C7 0.1uF
RF24
U6
NRF24L01
RF24_CE
RF24_CSN
RF_INT
RF69
U3
RFM69HW
ANT1
RF69_NSS
External flash
U4
AT25DF512C
FLASH_CSN
AVR ISP
P11
RESET
SCK
MISO
MOSI
SPIBUS
U7
ArduinoProMini
C8 0.1uF
DSENS0_URX
DSENS1_UTX
INT2
SENSOR_EN
REG_BYPASS
DSENS2_PWM
SPI_CSN
FLASH_CSN
RF24_CE
VBAT_SMPL
VBAT_SMPL_EN
I2C_SDA
I2C_SCL
ASENS0
ASENS1
JP5
JP6
INT1
RF24_CSN
RF69_NSS
R5 10K
R6 10K
Authentication
U5
ATSHA204A
P1
P2
P3
P4
P5
P6
P7
P8
P9
P10
CONN_01X04
CONN_01X05
CONN_01X07
DSENS1_UTX
DSENS0_URX
INT1
DSENS2_PWM
INT2
SPI_CSN
ASENS1
ASENS0
Header layout
Px:1 -> 5V
Px:2 -> 3.3V
Px:3 -> GND
P1:4 -> D1 (UART TX)
P2:4 -> D0 (UART RX)
P3:4 -> D3 (INT2)
P4:4 -> D6 (PWM)
P5:4 -> A7
P6:4 -> A6
P7:4 -> A4 (I2C SDA)
P7:5 -> A5 (I2C SCL)
P8:4 -> A4 (I2C SDA)
P8:5 -> A5 (I2C SCL)
P9:4 -> MISO
P9:5 -> MOSI
P9:6 -> SCK
P9:7 -> D7 (SPI_CSn)
PF
open source hardware
Designer: Patrick Fallberg
Sheet: /
File: MySensorsNode.sch
Title: MySensors Node
Size: A4
Date: Fri 17 Apr 2015
Rev: 1.0
KiCad E.D.A. kicad 0.201506062246+571723ubuntu14.04.1-product
Id: 1/1