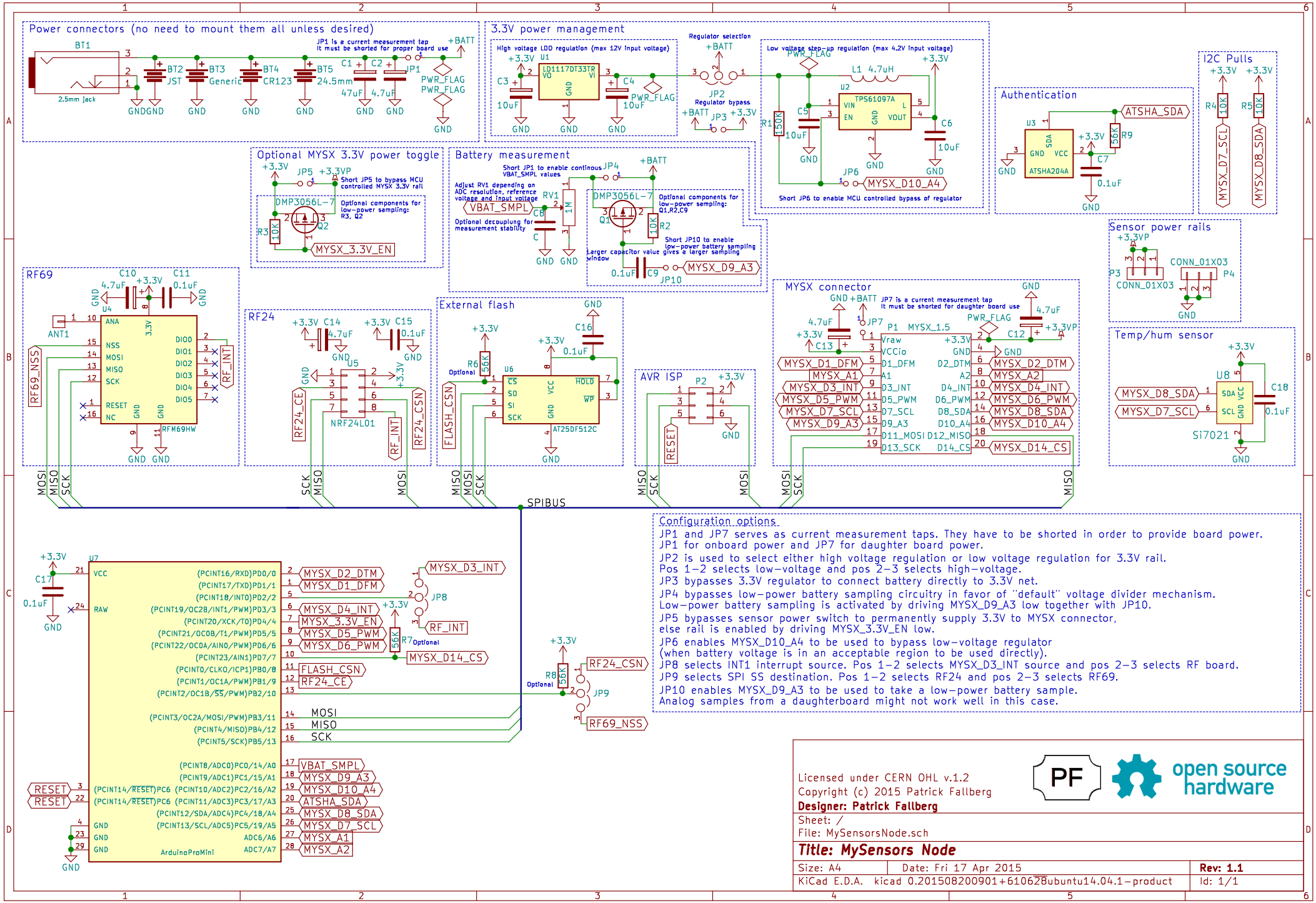
Power connectors (no need to mount them all unless desired)
JP1 is a current measurement tap it must be shorted for proper board use
3.3V power management
High voltage LDO regulation (max 12V input voltage)
Regulator selection
Regulator bypass
Low voltage step-up regulation (max 4.2V input voltage)
Short JP6 to enable MCU controlled bypass of regulator
Authentication
I2C Pulls
Optional MYSX 3.3V power toggle
Short JP5 to bypass MCU controlled MYSX 3.3V rail
Optional components for low-power sampling: R3, Q2
Battery measurement
Short JP1 to enable continous VBAT_SMPL values
Adjust RV1 depending on ADC resolution, reference voltage and input voltage
Optional decoupling for measurement stability
Optional components for low-power sampling: Q1,R2,C9
Short JP10 to enable low-power battery sampling
Larger capacitor value gives a larger sampling window
Sensor power rails
RF69
RF24
External flash
MYSX connector
JP7 is a current measurement tap it must be shorted for daughter board use
Temp/hum sensor
AVR ISP
SPIBUS
Configuration options
JP1 and JP7 serves as current measurement taps. They have to be shorted in order to provide board power.
JP1 for onboard power and JP7 for daughter board power.
JP2 is used to select either high voltage regulation or low voltage regulation for 3.3V rail.
Pos 1-2 selects low-voltage and pos 2-3 selects high-voltage.
JP3 bypasses 3.3V regulator to connect battery directly to 3.3V net.
JP4 bypasses low-power battery sampling circuitry in favor of "default" voltage divider mechanism.
Low-power battery sampling is activated by driving MYSX_D9_A3 low together with JP10.
JP5 bypasses sensor power switch to permanently supply 3.3V to MYSX connector,
else rail is enabled by driving MYSX_3.3V_EN low.
JP6 enables MYSX_D10_A4 to be used to bypass low-voltage regulator
(when battery voltage is in an acceptable region to be used directly).
JP8 selects INT1 interrupt source. Pos 1-2 selects MYSX_D3_INT source and pos 2-3 selects RF board.
JP9 selects SPI SS destination. Pos 1-2 selects RF24 and pos 2-3 selects RF69.
JP10 enables MYSX_D9_A3 to be used to take a low-power battery sample.
Analog samples from a daughterboard might not work well in this case.
Licensed under CERN OHL v.1.2
Copyright (c) 2015 Patrick Fallberg
Designer: Patrick Fallberg
Sheet: /
File: MySensorsNode.sch
Title: MySensors Node
Size: A4
Date: Fri 17 Apr 2015
Rev: 1.1
KiCad E.D.A. kicad 0.201508200901+61062~ubuntu14.04.1-product
Id: 1/1