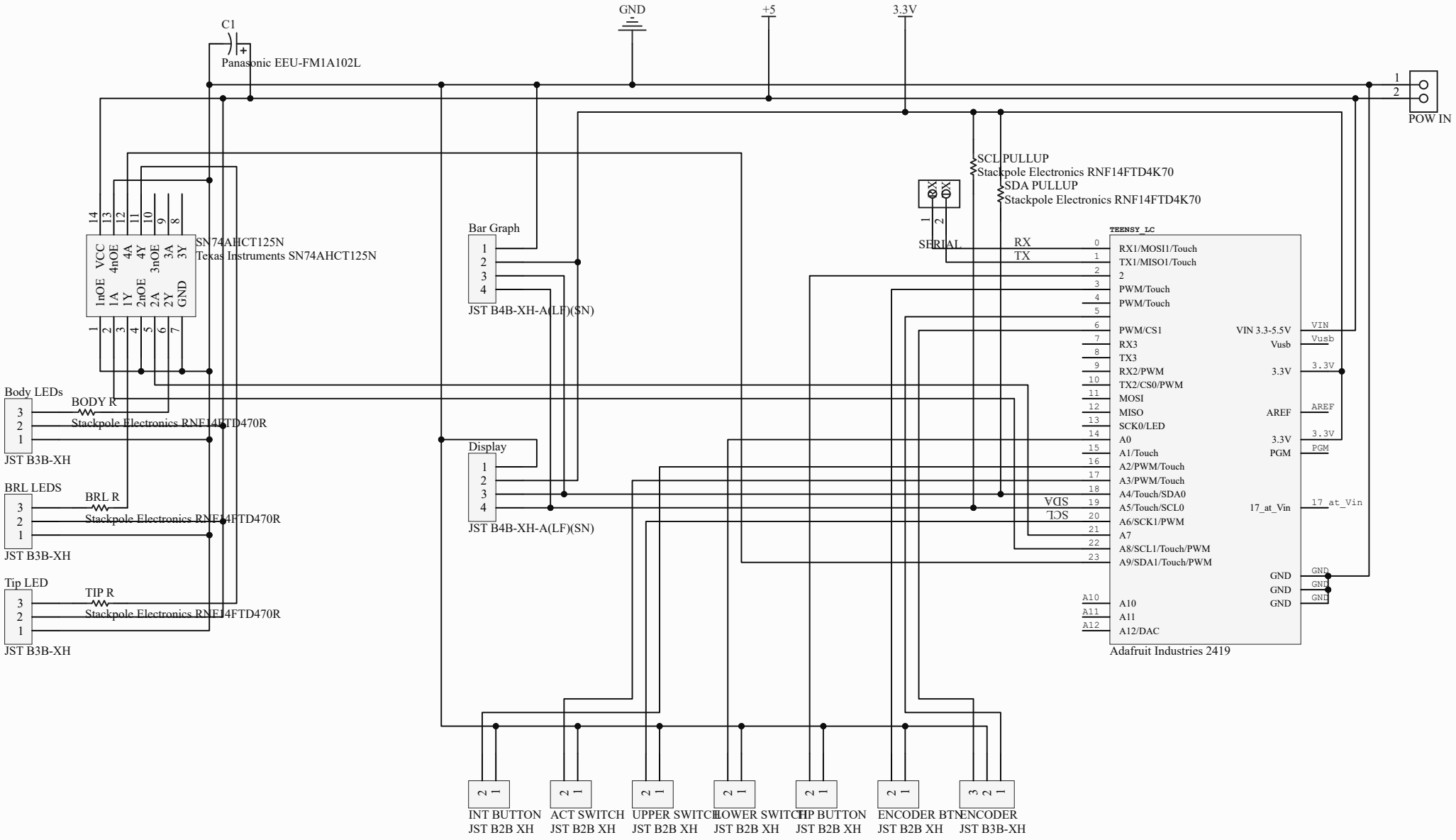

Title		
Size A4	Number	Revision
Date: 5/13/2023		Sheet of
File: Wand.SchDoc		Drawn By: