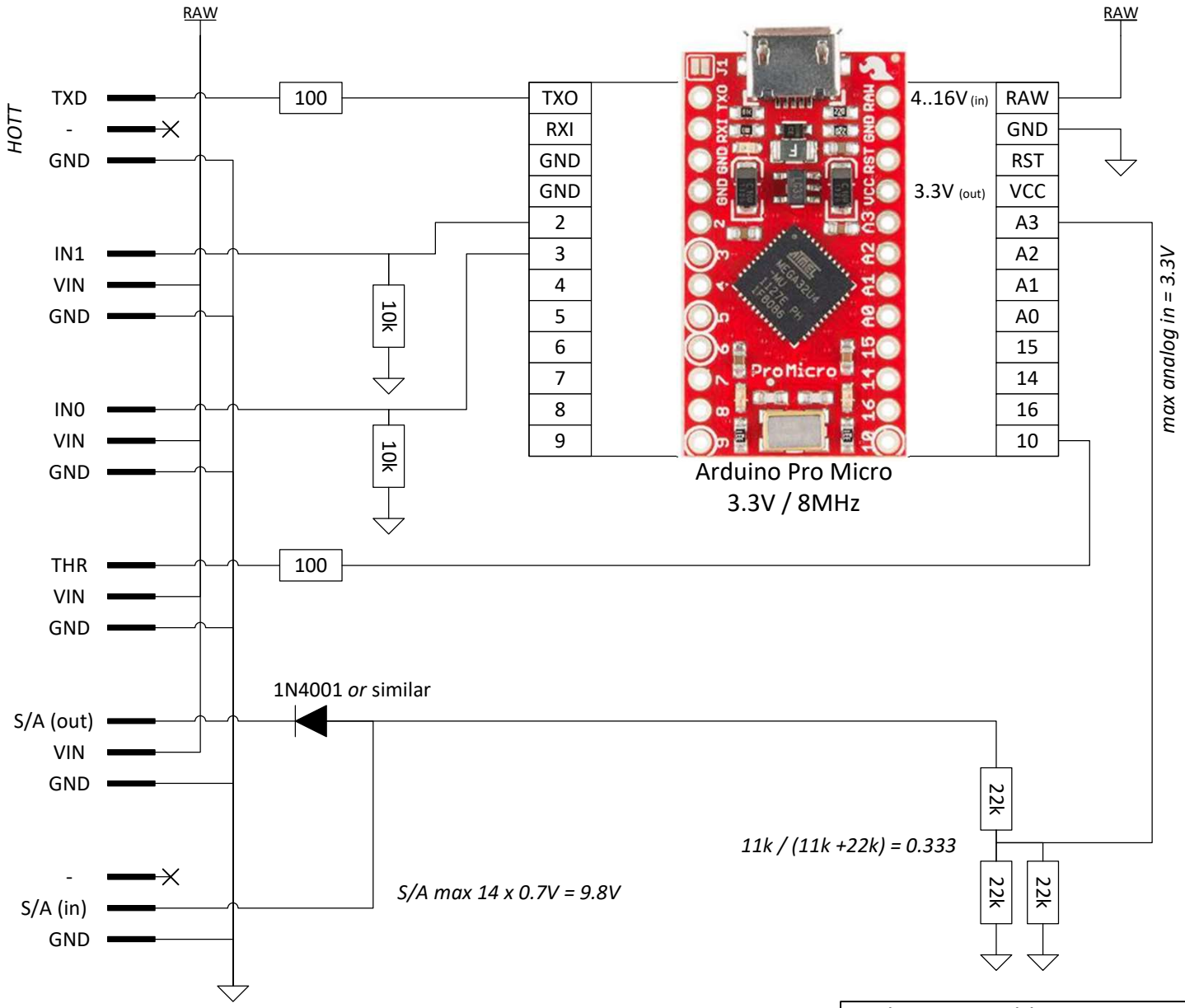

Author: F. Althaus Date: 19.05.2024	
Title: **MPPT-ESC Schematics**	Revision V1