LAB 2: IFA DESIGN FOR GSM

1. Objectives and preliminary considerations

During this lab session, we are going to design an IFA (Inverted F antenna) for the GSM band (880-960 MHz) using FEKO according the customer specifications.

After following a sequence of 5 steps the student should understand how the antenna works and how a design workflow can be done.

The deadline for delivering the report is April 13th. You can do it in groups of two persons as maximum. Please, use a one column format for the wording and show clearly the statement of each question (question and answer format).

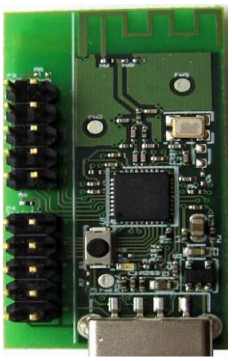

Prior to the start of the lab you can also download and read the application note available in Campus Virtual "*Texas Instruments_Application Note_Small Size 2.4 GHz PCB antennas_swra117d.pdf*". It is recommended to read the last lab report and the document GetStarted.pdf from FEKO, it will help you remember main ideas or concepts.

2. Practical session

Customer specifications are:

- Working frequency: 880 - 960 MHz, centre frequency approx. 920 MHz with VSWR < 3 (= return loss > 6 dB), Z_o = 50 Ω.
- Device dimension with antenna: height 10 cm and width 6 cm.
- Antenna clearance: height 2 cm and width 6 cm.

Because of time limitations, consider the following simplifications:

- The structure will be made of wires with radius 0.5 mm which is similar to using 2 mm width strips.
- Dielectric that supports the structure and the device housing effects are not considered (it is known that they would increase losses and shift the response towards low frequency).
- Maximum number of frequencies: 20.

Keep in mind that there is not a unique solution and different designs can fulfil all the specifications.

In the antenna design, consider that the production technology has a maximum resolution of 0.2 mm (separation between parallel conductors).

2.1. Monopole @ 920 MHz

As a starting point, used as a reference for the next steps, a λ/4 monopole will be defined and simulated:

a) From a starting CADFEKO session, create an infinite PEC at z = 0 (*Construct>>Plane>>Ground*).
b) Create a variable *H* with the length that you may consider necessary for having the best matching at 920 MHz.
c) Create a wire of length *H* perpendicular to the PEC, one of the ends should be connected to the ground plane (at *z* = 0). See the figure below.
d) Add a wire port at the end of the wire which is connected to the ground plane.
e) Feed the port with a voltage source 1 V and 50 Ω.
f) Define the simulation frequencies from 800 to 1100 MHz with 20 points.
g) Mesh the structure with the option *fine* and radius 0.5 mm.
h) Save, simulate and see the results in POSTFEKO.

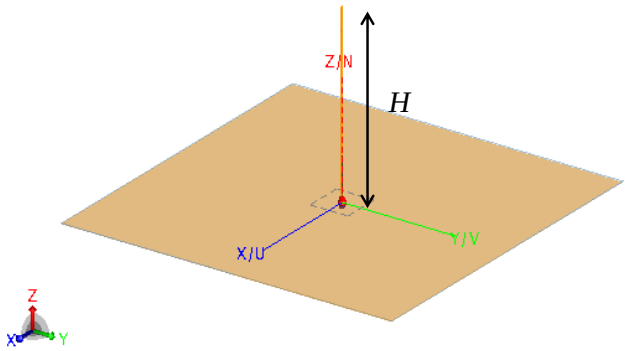

Q1. Plot the reflection coefficient. What do you have to do in order to obtain the minimum reflection coefficient at 920 MHz? Plot it together with the previous results. Use the Smith Chart to find the input impedance. Calculate the relative bandwidth. Do you fulfil the customer specs? Why?

2.2. L-shaped monopole @ 920 MHz

In this section, the height of the monopole will be reduced with the use of L-shaped monopole which will be analysed trying to keep the minimum reflection coefficient at the same frequency.

a) Save the previous work session and save again with a different name, for example *L_monopole*.
b) Change variable *H* to 2 cm (maximum height of the antenna).
c) Create a new variable *L1* with the estimated length that you may need for having the minimum reflection at 920 MHz.
d) As you can see in the figure below, create a horizontal wire from the top of the vertical wire to the x-direction using the *L1* variable.
e) Redefine or add a wire port at the edge of the vertical wire that is in contact to the ground plane.
f) Feed the port with a voltage source 1 V and 50 Ω.
g) Define the simulation frequencies from 800 to 1100 MHz with 20 points.
h) Important: Join the whole structure with the "*Union*" tool.
i) Mesh the structure with the option *fine* and radius 0.5 mm.
j) Save, simulate and see the results in POSTFEKO.

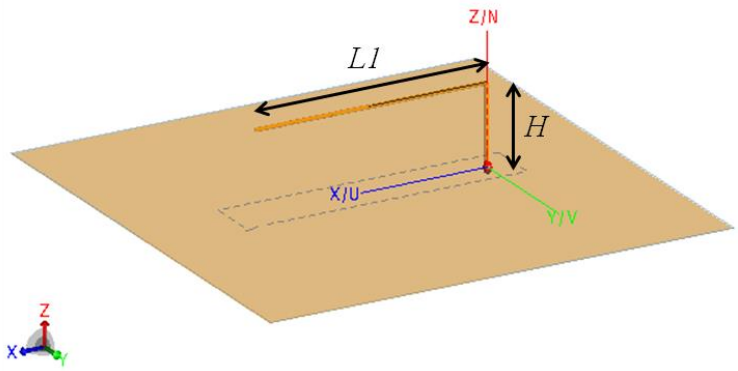

Q2. Adjust the value of *L1* for having the minimum reflection coefficient at 920 MHz. Calculate the total antenna length and compare it with the reference monopole. Comment the difference.

Q3. Find the impedance at 920 MHz. Comment the result and compare it with the standard monopole (reflection coefficient and Smith Chart). Do you fulfil the customer specs? Why?

2.3. IFA @ 920 MHz

To compensate the height reduction, as explained in the theory session, an inductive load will be added as shown in the figure below.

a) Save the previous work session and save again with a different name, for example *IFA*.
b) Create a new variable *L2* with a value of 2 cm.
c) Create a polyline using the reference points (-*L*2,0,0), (-*L*2,0,*H*) and (0,0,*H*).
d) Select the complete structure from the left side menu and make a union (it is always recommended to union the geometry before mesh).
e) Feed the port with a voltage source 1 V and 50 Ω, maybe it is already done.
f) Define the simulation frequencies from 800 to 1100 MHz with 20 points.
g) Important: Join the whole structure with the "*Union*" tool.
h) Mesh the structure with the option *fine* and radius 0.5 mm.
i) Save, simulate and see the results in POSTFEKO.

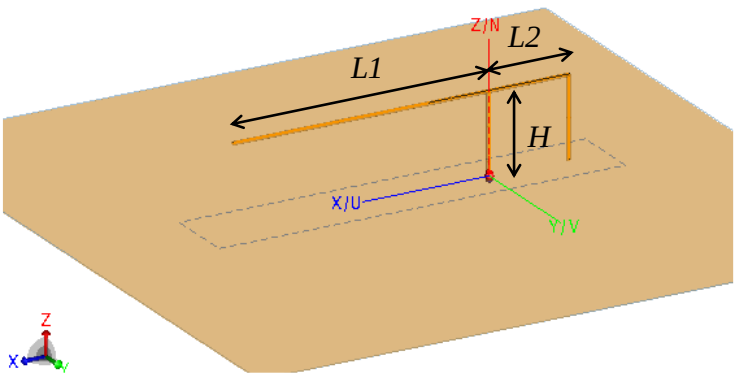

Q4. Compare the reflection coefficient and the Smith Chart with the previous simulations. You can plot several simulations in the same graph if you save each simulation with a different name. Use the "Add model" menu to import other simulation. Select from each simulation the data to plot. **Discuss the effect of the load and the differences.**

Q5. Adjust the variable L2 for reducing the reflection coefficient at 920 MHz. Show the results.

2.4. Meander IFA @ 920 MHz

As the previous antenna dimension is out of the available space a meander miniaturization technique will be used.

a) Save the previous work session and save again with a different name, for example *meander_IFA*.
b) Delete the horizontal L monopole line.
c) Create the following variables *H2* = 1 cm, *L3* = 0.5 cm, *L4* = 1 cm, *L5* = 1.2 cm.
d) Use the previous variables to create a polyline as shown in the figure below.
e) Feed the port with a voltage source 1 V and 50 Ω, maybe it is already done.
f) Define the simulation frequencies from 800 to 1100 MHz with 20 points.
g) Important: Join the whole structure with the "*Union*" tool.
h) Mesh the structure with the option *fine* and radius 0.5 mm.
i) Save, simulate and see the results in POSTFEKO.

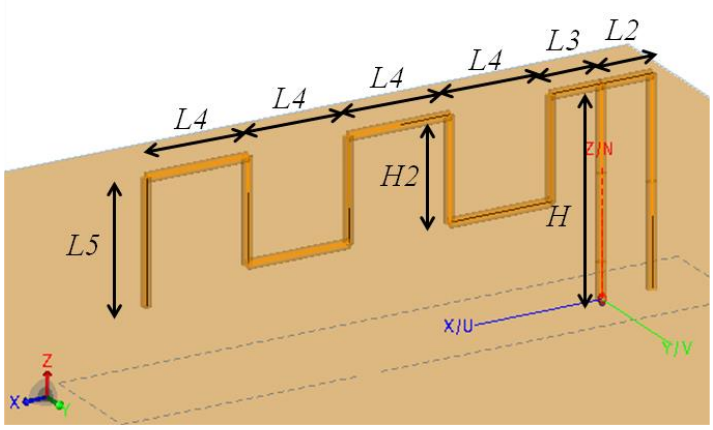

Q6. Tune the L5 and L2 value to achieve the best matching at 920 MHz. Compare reflection coefficient and Smith Chart with the previous simulation results. How do L5 and L2 lengths modify the impedance?

Q7. Calculate the total length of the meander starting at the antenna feeding point. Compare the length with the initial IFA structure and comment the differences. Does the antenna design fulfil the customer specs?

2.5. IFA with a real ground plane

As the antenna structure must be integrated into a specific device with its own ground plane, the infinite ground is substituted by the real ground available.

a) Save the previous work session and save again with a different name, for example *meander_IFA_realground*.
b) Create the variable W = 6 cm and L = 8 cm that are the real ground plane dimensions.
c) Delete the infinite PEC (*Construct>>Plane>>Ground*).
d) Create a rectangle modelling the ground as it is indicated in the windows to have the ground coplanar with the antenna structure.
e) Select the Rectangle1 structure from the tree in the left window and drag with the mouse to the Union1 structure.
f) Important: Join the whole structure with the "*Union*" tool.
g) Create the port, define voltage source and the simulation points, create the meshing, save, launch the simulation and see the results in POSTFEKO.

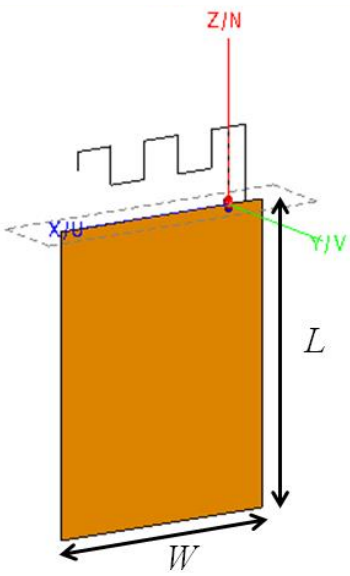

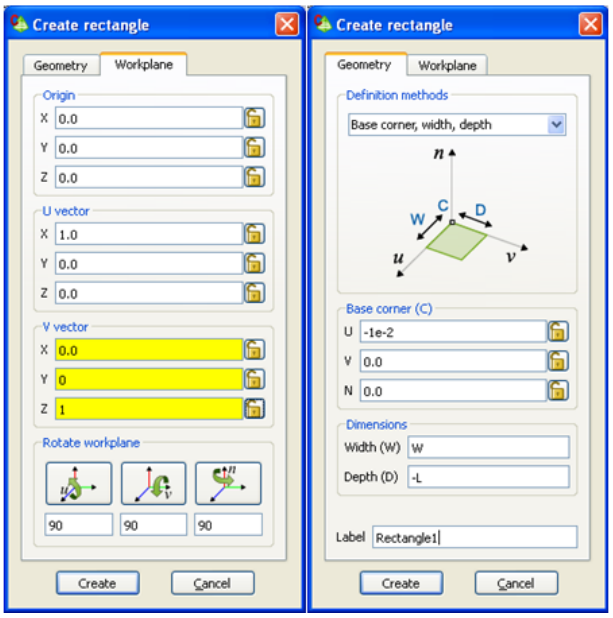

Q8. Plot the reflection coefficient and the impedance in the Smith Chart. Compare it with the results of the previous steps. Try to explain the main differences.

Q9. Adjust the antenna dimensions L5 and L2 to have the minimum reflection coefficient at 920 MHz and to fulfil the bandwidth of the spec. Calculate the relative bandwidth. Plot the final scheme of your design showing all the antenna dimensions as in a drawing.

Q10. Plot the 3D radiation pattern at the centre frequency with a logic scale in dB. Is the radiation pattern similar to a dipole antenna radiation pattern? Plot the 3 main cuts including the H and V polarization at 920 MHz.