A Simple Monitor for Tracking NBTI in Integrated Systems

Matthew Strong, Kushagra Bhatheja, Ruohan Yang, Degang Chen
Department of Electrical & Computer Engineering
Iowa State University
Ames, IA, USA
mstrong5@iastate.edu, kushagra@iastate.edu, rhyang@iastate.edu, djchen@iastate.edu

2021 IEEE International Midwest Symposium on Circuits and Systems (MWSCAS) | 978-1-6654-2461-5/21/$31.00 ©2021 IEEE | DOI: 10.1109/MWSCAS47672.2021.9531715

***Abstract*—NBTI is one of the primary concerns for long-term reliability in systems using deep submicron technologies. In this paper, we propose a simple on-chip sensor architecture that monitors degradation due to NBTI through pseudo-static measurements of the relative shift in threshold voltage. A representative pMOSFET is stressed to intentionally induce NBTI and then compared to a reference pMOSFET that is ideally unaffected by ageing. The proposed architecture can be used to measure degradation in multiple devices that are stressed under a variety of conditions with minimal additional overhead. The use of pseudo-static measurements reduces the measurement error introduced by the ageing of devices in supporting circuitry, and it allows for measurements to be completed in relatively few clock cycles.**

Keywords—reliability, ageing, NBTI, on-chip monitor, NBTI monitor

I. Introduction

Negative Bias Temperature Instability, or NBTI, is a phenomenon that reduces the transconductance of pMOS transistors by shifting their threshold voltages. It occurs when the devices are biased with a large negative gate-source voltage resulting in the formation of charge traps in the gate oxide. NBTI became a significant concern as the gate oxide thickness in CMOS technologies continued to scale down and the effects became more pronounced. NBTI is the dominant ageing mechanism for determining the end of life in nanoscale devices[1]. This has sparked an interest in monitoring device performance after product deployment to guarantee reliable operation, especially as the scale of both integration and proliferation of semiconductor circuits continues to increase.

Different pMOS transistors will undergo different amounts of degradation due to NBTI depending on how they are operated. Digital circuits are particularly vulnerable to the effects of NBTI because transistors in the design may have the maximum voltage of the process applied to their gates for extended periods of time. The degradation of these transistors' transconductances leads to slower switching times and can eventually cause timing violations in the system. This has motivated the design of many NBTI monitors that use Time-Digital Converters to measure delays in a signal chain caused by aged transistors[2], [3]. While this approach is attractive when trying to predict the switching dynamics of logic circuits, it can be difficult to translate the delay measurements into a difference in threshold voltage on chip, which is a more useful metric for characterizing analog circuits with constant DC biases, or with constant common mode voltages.

In this paper, we present an architecture for monitoring NBTI that is intended to be independent of application, and so may be tailored to monitor the worst-case degradation of devices of interest in the system. The design is intended to be used in an integrated system so that it may borrow other circuits in the system to perform its measurements.

II. Sensor Architecture

There is an extensive body of work dedicated to accurately modeling NBTI for various materials and physical mechanisms[1], [4]. A common characteristic among all of these models is that the change in threshold voltage is a nonlinear function of the overdrive voltage and the duration of time for which the voltage is applied. Assuming the gate-source voltage of a pMOS transistor is larger than its threshold voltage, the threshold voltage's magnitude will increase with increasing time, increasing temperature, and increasing gate-source voltage magnitude. NBTI is a partially recoverable effect, meaning that if the electric field is removed from the gate-source junction then the threshold voltage of the transistor will trend towards its original value over time. This has significant consequence when trying to evaluate degradation in switching circuits because the amount of threshold voltage shift will depend on the switching frequency and duty cycle. On the other hand, transistors in analog circuits are usually biased so that they remain in a particular operating region, such as strong inversion saturation, and hence would experience constant stress with possibly varying overdrive voltages, but no NBTI recovery[5].

Our architecture allows a designer to choose how various devices under test are stressed by their gate-source voltages to best represent devices of interest in the system. Fig. 1a shows the circuit configuration for the stressing phase of operation and Fig. 1b shows the configuration for measurement. During the stress phase, the switches on the drains of M3 and M4 prevent current from flowing in either of the branches. The transistors M1 and M2 are sized and biased so that they will operate in strong inversion saturation during the measurement phase with a low overdrive voltage to minimize NBTI. They will operate in the linear region during the stress phase with an almost zero drain-source voltage. This means that the sources of M3 and M4 will be nearly VDD during the stress phase. M4 is diode connected during the stress phase with almost zero current flowing from drain to source, so it will be operating in deep subthreshold with almost zero gate-source voltage. This will mean that M4 will experience no NBTI degradation during the stress

This research was funded by the Semiconductor Research Corporation.

Authorized licensed use limited to: National Institute of Technology- Delhi. Downloaded on April 14,2026 at 13:51:30 UTC from IEEE Xplore. Restrictions apply.

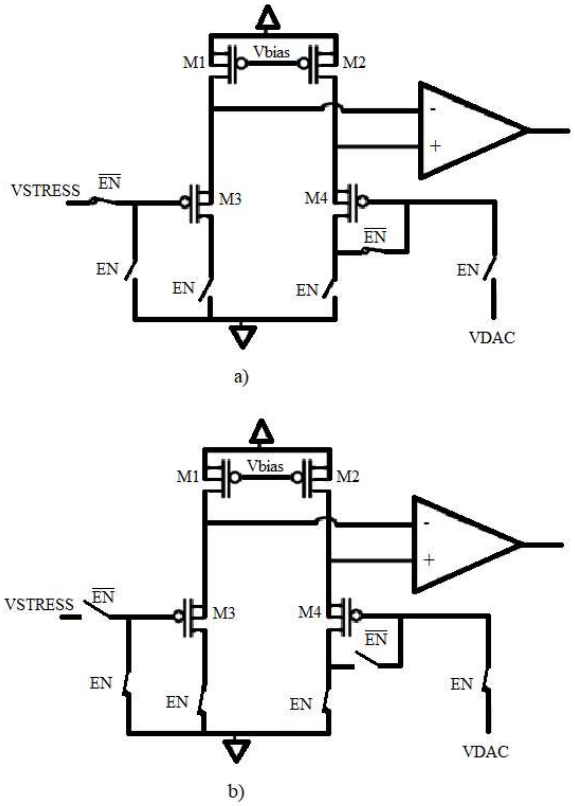

Fig. 1. NBTI Sensor (a) configured for the stress phase (b) configured for the measurement phase.

phase. M3's gate voltage will be whatever desired stressing voltage the designer chooses, static or dynamic. During the measurement phase, the switches at the drains of M3 and M4 are closed to allow current to flow in each branch. M3's gate is biased with a static reference voltage such that is operating in strong inversion saturation. In Fig. 1, the reference voltage for measurement is the low supply voltage VSS. M4's gate is biased with the voltage output of a Digital to Analog Converter (DAC). Since the threshold voltage of M3 is expected to change over the life of the chip, the M1 biasing voltage and the M3 reference voltage must be chosen so that M1 and M3 will still be in strong inversion saturation during measurement when the threshold voltage of M3 reaches "End of Life."

The measurement operation occurs by searching for the DAC code that will cause the source voltages of M3 and M4 to be matched. This is done by evaluating the comparator output in a successive approximation algorithm. When the source voltages of M3 and M4 are equal, M1 and M2 will have identical gate-source and drain-source voltages. If M1 and M2 are perfectly matched, then the currents in the M3 and M4 will be identical. Then, assuming a square-law model for transistor current,

$$I_{D3} = \frac{1}{2}\beta_3(V_{o1} - VSS + V_{T3})^2 \quad (1)$$

$$I_{D4} = \frac{1}{2}\beta_4(V_{o2} - V_{DAC} + V_{T4})^2 \quad (2)$$

V_{o1} and V_{o2} are the source voltages of M3 and M4, respectively. Equating equations (1) and (2) and assuming V_{o1}=V_{o2} and M3 and M4 are perfectly matched with the exception of their threshold voltages,

$$V_{DAC} = V_{T4} - V_{T3} + VSS \quad (3)$$

In equation (3), we have assumed that V_{T3} is negative and less than V_{T4} because of NBTI induced in M3, so V_{DAC} is greater than VSS. However, it is possible that V_{T4} is less than V_{T3} before M3 experiences NBTI. This along with mismatches between M1 and M2 and between M3 and M4 lead to the DAC output voltage being expressed by (4) at the end of the measurement algorithm.

$$V_{DAC} = V_{T4} - V_{T3} + \sqrt{\frac{2I_{D3}}{\beta_3}} - \sqrt{\frac{2I_{D4}}{\beta_4}} + V_{G3} \quad (4)$$

V_{G3} should be chosen so that the minimum expected value of the right-hand side of (4) is within the output range of the DAC. Since M1 and M2 are biased with a low overdrive voltage to avoid NBTI, the drain currents of M3 and M4 should be independent of system age. Neglecting the degradation in hole mobility of M3, the additional terms in (4) will be independent of age and add a constant offset to the NBTI measurements over the system lifetime. This means that the shift in threshold voltage of M3 can still be tracked.

Two major factors that can affect the accuracy of the NBTI measurement are the ageing of supporting devices in the circuit and ageing of the device under test by a different mechanism. Hot Carrier Injection (HCI) is another significant ageing mechanism in deeply scaled devices. HCI also causes a shift in the threshold voltage of a transistor and reduces its transconductance, but this occurs when high-energy charge carriers enter the conduction channel and mostly occurs in fast switching transistors or transistors that have shoot-through current. The device(s) under test in this architecture will only have switch leakage current flowing through during the stress phase, which is most of their lifetime. During the short measurement phase, the current through the device(s) under test can be chosen to be small as well. The critical devices in this architecture that are not under test are M1, M2, M4, and the input pair of the comparator. M1, M2, and M4 are specifically designed to experience little to no NBTI. These transistors also have the same drain current conditions as M3 throughout the chip lifetime, so they will also experience little to no HCI degradation. The switches in the design are realized by nMOS and pMOS transistors and will very likely age due to PBTI and NBTI, respectively. If the stress voltage is a dynamic signal, the transistors that connect the stress voltage to the gate of M3 may age due to HCI as well. However, the measurement accuracy is only affected during the measurement

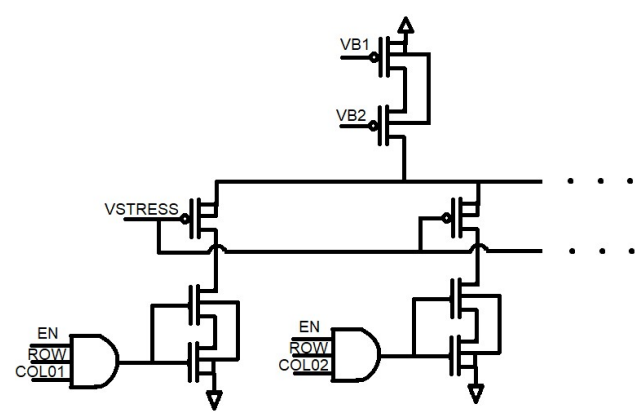

Fig. 2. Row of parallel connected devices under test.

Authorized licensed use limited to: National Institute of Technology- Delhi. Downloaded on April 14,2026 at 13:51:30 UTC from IEEE Xplore. Restrictions apply.

phase and only by the switches that are closed. The closed switches will have a static or pseudo-static current flowing through them. The current through the switches at the gates of M3 and M4 will quickly settle to zero and the gate voltages will settle to the static reference voltage and the DAC output voltage, respectively. Current will flow through the switches at the drains of M3 and M4, but their on-resistance will continue to be relatively low even after significant degradation due to ageing. Additionally, M3 and M4 are operating in saturation and small variations on their drain voltages will have a negligible effect on their source voltages. The primary concern for the comparator is that ageing devices in the circuit will cause a shift in its offset voltage, which is primarily determined by its input pair. Since the common mode input to the comparator is close to VDD during the stress phase, a pMOS input pair would not age due to NBTI. The comparator input pair will probably have momentarily high current densities while switching and the pair could age due to HCI, but this would only occur during measurements which is a small fraction of their lifetime.

A final important note on this architecture is that the device under test will have little to no recovery during the measurement phase. The measurement time for a DUT is determined by how long it takes to complete the successive approximation algorithm. The algorithm's time duration is based on how long it takes for the comparator's input to settle and by how long it takes to change the DAC's output, so the measurement time may be quite fast for small DUTs. The monitor is designed so that the DUT is operating in strong inversion saturation during measurement. The combination of short measurement times and continuing to apply an electric field to the gate of the DUT during measurement limits how much the device will recover from NBTI.

III. Design Example & Simulations

NBTI is a stochastic process[6]–[8], so multiple devices with perfect matching and identical stressing conditions will cause a random amount of degradation. Thus, on-chip monitoring and characterization of NBTI requires the collection and analysis of large datasets. Since this architecture is simple and the time to measure a single device can be relatively low, a reasonably large number of devices can be tested under various conditions. This type of test array was designed in a 65nm process using a 1 V supply.

A 256-device array was arranged in 16x16 grid with each device being identically stressed. Every transistor to be tested in the array is a minimum-sized pMOS transistor. Each row in the array has 16 devices connected in parallel as shown in Fig. 2. Cascoded transistors are used to source current to the devices under test. Cascoding the transistors improves matching to the biasing circuit. Since the devices under test are connected in parallel, leakage current into unselected devices will cause error in the measurement. It was found during simulations that increasing the "off" resistance of the switches improved the accuracy of the measurement even though it also increased the "on" resistance of the switches as well. Series-connected minimum-sized nMOS transistors are used for the switches that are connected to the drains of the devices under test and the drain of the reference transistor. The device to be tested is selected through an 8-bit address that is loaded into a register. A row decoder and column decoder each select 4 bits from the 8-bit address and convert their respective words into unary signals. 16 3-input AND gates in each row share two of their inputs, an input that enables the measurement phase of the monitor and an input that selects the row. When a row and column are selected, the appropriate AND outputs a logic '1' and closes the switch at the drain of the device under test. This allows current to flow through the device under test and the measurement to be performed. Each row has its own current source to prevent leakage current from row to row that would introduce error. Only the selected row will have current flowing in it at any time during the measurement phase. A 16:1 multiplexer selects which row voltage will be applied to the comparator input, and the other comparator input is connected to the source of the unstressed reference transistor.

A VDD of 1 V and a VSS of 0 V was chosen for the design. The reference voltage for measurements that should guarantee a positive offset in the NBTI measurement was generated by sourcing current through a resistor during the measurement phase only. The offset was generated using the same cascoded transistors as were used for each row in the array, and the nominal reference voltage during measurement is 170 mV. During the measurement phase, a set of switches will disconnect every device to be tested from the stress voltage and connect the reference voltage to their gate. This will cause the devices in each row that is not selected to have a source-gate voltage approximately equal to VDD less the reference voltage, 830 mV. These transistors will degrade due to NBTI, but at a reduced rate. The 16 transistors in the row to be tested will have a source-gate voltage determined by the selected test device, and these transistors will likely remain in strong inversion unless there is a substantial difference in their threshold voltages, so they should have little to no recovery from NBTI.

Simulations were performed to estimate how the NBTI measurement is affected by process variations and device mismatches. Fig. 3 shows a histogram of the measurement offset variation over 1024 samples. The initial threshold voltage difference between the device under test and the reference device is added to the offset as well because we only wish to measure the change in threshold voltage due to NBTI, so the NBTI measurement prior to stress being applied will be zero. The mean offset for this design is 164 mV with a standard deviation of 34.4 mV, meaning our choice in nominal reference voltage is greater than 3σ. NBTI was simulated in the devices under test by applying a voltage to their gates that was in series with the reference voltage. The voltage source used to simulate NBTI was swept from 0 to 100 mV while a separate voltage was applied to the gate of the reference transistor such that the source voltages of the reference transistor and the test transistor remained equal. This was done to calculate the nonlinear error in the measurement due to the monitor. This error does not include nonlinearities of a DAC that would be present in the actual

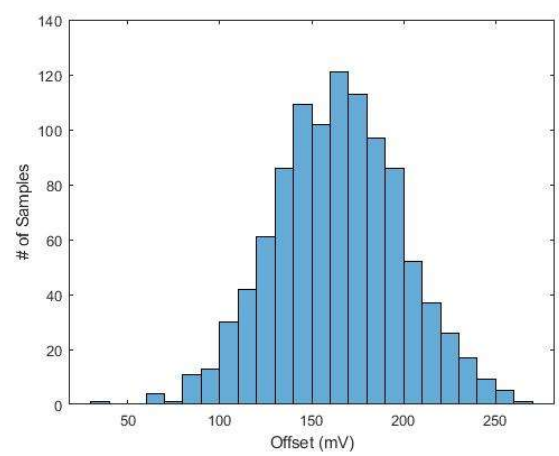

Fig. 3. Histogram of simulated NBTI measurement offset for 1024 samples.

Authorized licensed use limited to: National Institute of Technology- Delhi. Downloaded on April 14,2026 at 13:51:30 UTC from IEEE Xplore. Restrictions apply.

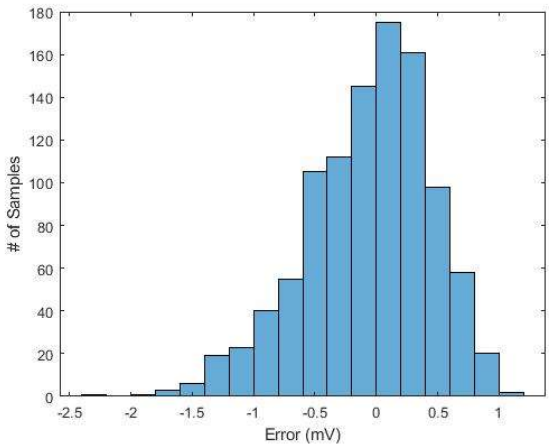

Fig. 4. Histogram of the worst-case simulated measurement error due to monitor nonlinearity for 1024 samples.

design, nor does it include quantization error from the conversion that would occur on chip. A histogram of the worst error of the monitor during the sweep of NBTI for 1024 samples is shown in Fig. 4. The mean error is -64.4 µV and the standard deviation of the error is 515 µV. Since the supply voltage is 1 V, this equates to about 8-bit linearity in the monitor with 3σ of variation.

This type of architecture is intended to be deployed in a SoC, so several parts necessary for this monitor's operation are likely already located on the chip, such as the biasing circuits, DAC, and memory for storing the NBTI measurement codes. Borrowing a DAC from another system for the measurement phase would save in area overhead, and the measurements would be infrequent relative to other system operations. A layout of the register, column/row decoder, test device array, and comparator was created to estimate the area this design uses assuming the DAC, DC reference circuit, and memory were shared with other systems on the chip. The design used an area of 200x172 μm^2, or 34400 μm^2, for 256 devices to test. This is on average 135μm^2 per test device.

For this design, every device to be tested has the same voltage applied to its gate during the stress phase. It is possible to apply a variety of stressing voltages in the array to test multiple operating conditions in the circuit. For instance, a set of devices in the array may be stressed with VSS to cause the worst-case static NBTI ageing while another set of devices are stressed with the clock signal. The ageing of critical switching transistors can be emulated as well by using the switch's input driver to stress devices in the array. Since the measurement of NBTI is a pseudo-static measurement, the array may be distributed over a relatively large area of the chip without error in the measurement due to bus delay. This would make it possible to place test devices next to the transistor or transistors they are emulating and prevent differences in the device operation due to process gradients.

IV. Conclusion

This paper presents a simple and effective architecture for estimating NBTI in system devices. The architecture is flexible enough that a variety of operating conditions can be emulated in the sensor and it has a low overhead so that multiple devices can be tested without a significant cost to area. Integrated ageing monitors are becoming essential in systems that must have a high confidence in their reliability, and the demand for these reliable products continues to grow. So too will the demand grow for low-impact and low-cost monitors that will accurately track a chip's performance throughout its life.

References

[1] S. Mahapatra *et al.*, "A Comparative Study of Different Physics-Based NBTI Models," *IEEE Trans. Electron Devices*, vol. 60, no. 3, pp. 901–916, Mar. 2013, doi: 10.1109/TED.2013.2238237.

[2] K. Kang, S. P. Park, K. Kim, and K. Roy, "On-Chip Variability Sensor Using Phase-Locked Loop for Detecting and Correcting Parametric Timing Failures," *IEEE Trans. Very Large Scale Integr. VLSI Syst.*, vol. 18, no. 2, pp. 270–280, Feb. 2010, doi: 10.1109/TVLSI.2008.2010399.

[3] J. Keane, T.-H. Kim, and C. H. Kim, "An On-Chip NBTI Sensor for Measuring pMOS Threshold Voltage Degradation," *IEEE Trans. Very Large Scale Integr. VLSI Syst.*, vol. 18, no. 6, pp. 947–956, Jun. 2010, doi: 10.1109/TVLSI.2009.2017751.

[4] W. Wang, V. Reddy, A. T. Krishnan, R. Vattikonda, S. Krishnan, and Y. Cao, "Compact Modeling and Simulation of Circuit Reliability for 65-nm CMOS Technology," *IEEE Trans. Device Mater. Reliab.*, vol. 7, no. 4, pp. 509–517, Dec. 2007, doi: 10.1109/TDMR.2007.910130.

[5] S. Askari, M. Nourani, and M. Rawat, "An on-chip NBTI monitor for estimating analog circuit degradation," in *2012 IEEE 30th VLSI Test Symposium (VTS)*, Apr. 2012, pp. 68–73. doi: 10.1109/VTS.2012.6231082.

[6] B. Kaczer *et al.*, "Origin of NBTI variability in deeply scaled pFETs," in *2010 IEEE International Reliability Physics Symposium*, May 2010, pp. 26–32. doi: 10.1109/IRPS.2010.5488856.

[7] J. Martin-Martinez *et al.*, "Probabilistic defect occupancy model for NBTI," in *2011 International Reliability Physics Symposium*, Apr. 2011, p. XT.4.1-XT.4.6. doi: 10.1109/IRPS.2011.5784605.

[8] P. Singh, E. Karl, D. Blaauw, and D. Sylvester, "Compact Degradation Sensors for Monitoring NBTI and Oxide Degradation," *IEEE Trans. Very Large Scale Integr. VLSI Syst.*, vol. 20, no. 9, pp. 1645–1655, Sep. 2012, doi: 10.1109/TVLSI.2011.2161784.

Authorized licensed use limited to: National Institute of Technology- Delhi. Downloaded on April 14,2026 at 13:51:30 UTC from IEEE Xplore. Restrictions apply.