Delay Effects and Frequency Dependence of NBTI with Sub-microsecond Measurements

Y.-C. Huang[1], M.-H. Hsieh[1], T.-Y. Yew[1], W. Wang[1], D. Maji[1], Y.-H. Lee[1], W.-S. Chou[2], and P.-Z. Kang[2]

TQRD[1], MRSD[2], Taiwan Semiconductor Manufacturing Company, Ltd. 121, Park Ave. 3, Hsinchu Science Park,

Hsinchu, Taiwan 300-77, R.O.C.

Tel: 886-3-5636688 ext-7023867, e-mail: huangycw@tsmc.com

***Abstract*—Negative Bias Temperature Instability (NBTI) has been one of the major challenges during process development of advanced technology. In this paper, NBTI of High-k/metal gate (HK/MG) in 10nm FinFET technology has been evaluated. For the first time, fast measurements within sub-microsecond (15ns ~ 1μs) delay time have been demonstrated. Such short recovery time (delay time due to measurement) is achieved through built-in current comparator and a simple state machine. In this paper, we investigated the frequency dependence (10MHz ~ 1GHz) and the impacts of short delay time on NBTI. A 1024-DUT array with inverter-like AC stress [1] was constructed to compare the recovery effects between very short (<< 1μs) and long (10s) measurement time. Degradation slopes (time exponents) with different measurement delay time exhibit distinct values while similar frequency dependence of NBTI [2] exists in both short and long delay time domains. The key NBTI indices such as voltage acceleration factor (VAF) and activation energy (E_a) were also extracted and compared between test structures.**

Keywords- FinFET, NBTI, HK/MG, Sub-microsecond delay, NBTI activation energy, NBTI VAF,

I. INTRODUCTION

NBTI is one of the critical reliability concerns for PMOSFETs with device downscaling [3-12]. NBTI manifests as an increase in absolute value of V_T and decrease in I_{ON} when a large negative voltage is applied to the gate at elevated temperatures. Several NBTI mechanisms and models have been proposed in the literature to understand the underline physics and to accurately predict the reliability lifetime [3-6]. Among all the models generation of interface trap whose dynamics is described using reaction and diffusion (RD) mechanisms is most popular [3]. In spite the ability to explain most of the NBTI features, RD model fails to explain the NBTI relaxation that spans over several decades [7]. However, it is argued that understanding the nature of relaxation could hold the key to resolve the underlying NBTI mechanism [7]. So, other model like hole trapping in the preexisting traps and thermally activated relaxation has also been introduced as alternative explanation in the literature [6-8]. As of date, most discussions affirm physical models with recovery time longer than a few microseconds of either DC or AC stress at slow frequency [3-12]. Adding the fact that, it is extremely rapid transition between occupied and vacant states of a trap/defect that most likely to occur in a switching circuit. For the sake of aging model development, it is crucial to characterize NBTI effect at high frequency AC stress with minimal recovery. This is especially the case when critical data path is sensitive to phase shift or timing delay of high speed signal. Owning to the limitation of laboratory apparatus, recovery effect less than 1μs is very difficult to achieve. This sub-microsecond barrier is overcome in this study through design approach so that one can able to glimpse at the true nature of NBTI with minimum interference of measurement delay. The primary purpose of this study is to characterize the most approximate value of time exponent, VAF, and E_a due to NBTI. VAF and E_a between sub-microsecond and longer recovery time at high frequency are compared. The relationship between stress frequency and delay time is characterized. The implications of these extracted values are also discussed. At last, lifetime extrapolation suggests a lower stress voltage with sub-microsecond measurement would be viable due to its large degradation and substantial voltage acceleration.

II. EXPERIMENTAL

All devices and test structures are fabricated using 10nm FinFET with HK/MG technology. The DUTs in the internal sensing structure (Fig. 1) have dimension (W/L = 4-fin/10nm). Measuring the I_{dsat} within 1μs can be realized by internal current sensing (Fig. 1) instead of reading the absolute current value from external meters. The sensing period can be set from 15ns to 1μs during AC stress. Frequency range of stress signal, generated by built-in RO, lies from 10MHz to 1GHz. However, the pulse width of a very fast AC stress signal only exists for a few nanoseconds, e.g. 2ns for 250MHz. So, 15ns delay is equivalent to 15 cycles of 1GHz signal. An average value of seven sensings is recorded as measurement result in this study (Fig. 2). During sensing period, I_{dsat} of DUT is compared with reference current I_{ref}. If I_{dsat} is smaller than I_{ref}, the trip point of sensing inverter will be triggered to send out a digital signal to latch at the end of sensing period. By inspecting the external pad of this latch, one can immediately know the current comparison result after sensing period. To ensure the fast response of I_{ref} current sink, I_{ref} supplied by external meter is mirrored to an internal path to establish a steady and ready current flow. In this study, I_{dsat} is captured by sweeping I_{ref} until the latch change from low to high. Therefore, the sensing resolution is determined by external current supply.

It is in our interest to study how the growing measurement delay time influences the amount of I_{dsat} recovery. To characterize the impact of recovery time on NBTI, an inverter-like AC stress array with much longer delay time is also adopted as shown in Fig. 3. Here, all DUTs are stressed

Authorized licensed use limited to: National Institute of Technology- Delhi. Downloaded on April 14,2026 at 13:05:56 UTC from IEEE Xplore. Restrictions apply.

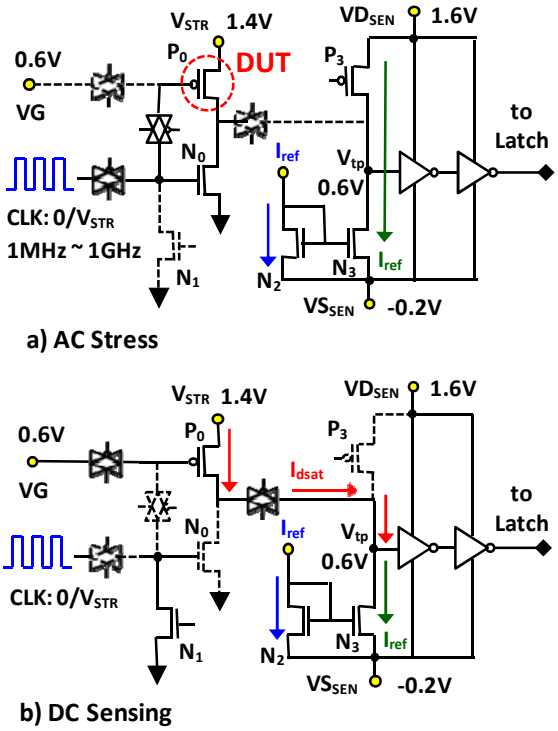

Figure 1. a) Built-in ring oscillator (RO) provides the stress signal to CLK. RO and all other devices, except for DUT (P_0), are made of thick oxide devices. Amplitude range of CLK is set to 0V~V_{STR} to make the DUT undergo inverter-like transitions. Sensing circuit is separated from DUT in stress mode. b) During DC sensing period, N_0 and P_3 are switched off by pull down device N_1 and control signal respectively. In the meantime, channel current of P_0 is being drained by the mirrored I_{ref}. One can make the trip point V_{tp} the same as VG by adjusting VS_{SEN} and VD_{SEN}. P_3 and N_3 were designed to have V_{tp} equal to 0.8V when VS_{SEN} and VD_{SEN} are 0V and 1.8V respectively. So, it is I_{dsat} flowing through P_0 with the depicted setting when V_{tp} is swept by, i.e. both V_{gs} and V_{ds} are 0.8V. In this experiment, I_{dsat} was measured by sweeping I_{ref} until the output of latch changed from low to high. The transitions between stress mode (1.4V) and sensing mode (0.8V) only takes tens of picoseconds. It is negligible compared to the intended recovery time (> 15ns).

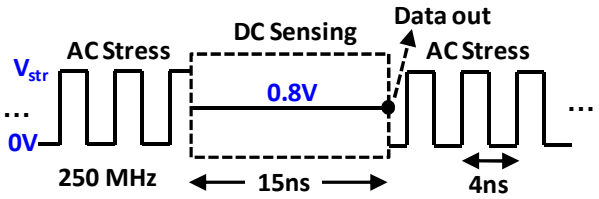

Figure 2. 15ns sensing periods are embedded into AC stress cycles every 1µs. Duty ratio of sensing to AC stress is 1 to 64, i.e. 1.56%. Although current comparison can be completed within 1ns, data will not be sent to latch until at the end of the sensing period. In other words, DUT recovers for 15ns at 0.8V during each sensing period. Since sensing could start at rising edge, ON state, falling edge or OFF state, each read point takes the average of seven current comparisons. Latch can be reset through external signal before taking a new sensing result.

simultaneously and the sensing is done by accessing DUT one by one. Both structures (Figs. 1 and 3) have the same stress frequency range to have a justifiable comparison. Regarding methodology, VAF extraction and lifetime extrapolation are based on power law. Both VAF and E_a are collected at three temperatures: 30°C, 85°C and 125°C.

III. Result and Discussion

A. Sub-microsecond delay time

Fig. 4 shows time evolution of I_{dsat} degradation for 15ns sensing period, ultra-fast measurement within 1µs and conventional long delay time (> 1s). One should note that degradation after long delay is defined as the median I_{dsat} shift in a 1024-DUT sample. As expected, it is observed that reduced NBTI recovery during measurement results in more degradation and reduced power law slope (n) compared to long delay measurement. Moreover, the results shown in Fig. 4 are captivating as more than half of the degradation shows recoverable within 1µs. This recovery also contributes to the steeper degradation slope appear in 10s delay time [13]. In other words, most of the fast traps recover quickly and diminish the degradation after a few microseconds. Although the degradation is halved from 15ns to 1µs, their time exponents do not show significant difference. The similarity of the slopes for 15ns and 1µs sensing time suggests the time exponent might not be very sensitive to the amount of recovery. It indicates possibly only the same kind of "fast" trap can emit in the sub-microsecond domain.

B. Frequency Dependence of Relaxation

The primary issue of NBTI is that the damage created during stress starts to relax immediately after the stress is removed. Such behavior hinders the correct extraction of device parameters [7, 10]. So, minimization of this issue is of particular importance and useful parameter for the proposed circuit. Fig. 5 shows extracted relaxation behavior at 0.8V after 15ns, 1µs and 10s with wide stress frequency ranges. Neither 15ns delay in this study nor 10s delay in our previous investigation [2] display monotonic frequency dependence on degradation.

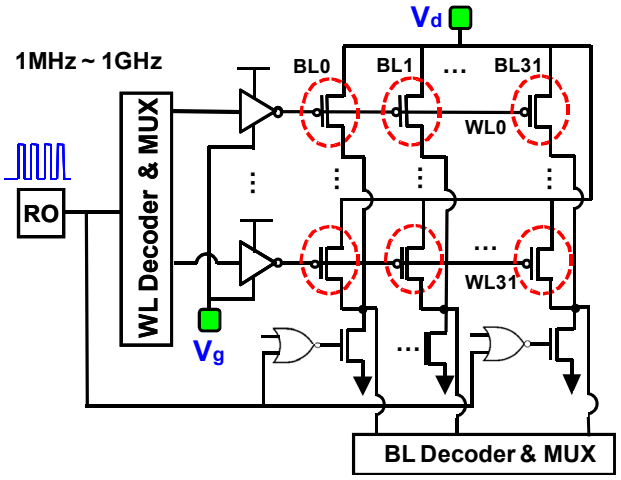

Figure 3. 1024-DUT NBTI test array with inverter-like stress [1] is adopted to get statistical meaningful data through direct measurement paths from V_d pad. Although all DUTs are stressed simultaneously to save time, each DUT can only be accessed one by one. This naturally introduces longer measurement delay. Those DUTs in this array are chosen to be the same size of the one in internal sensing structure (Fig. 1a). In this way, one can easily compare the data sets extracted from these two structures (Figs. 1 and 3) to find the correlation between recovery time and NBTI effect at the same stress frequency.

Authorized licensed use limited to: National Institute of Technology- Delhi. Downloaded on April 14,2026 at 13:05:56 UTC from IEEE Xplore. Restrictions apply.

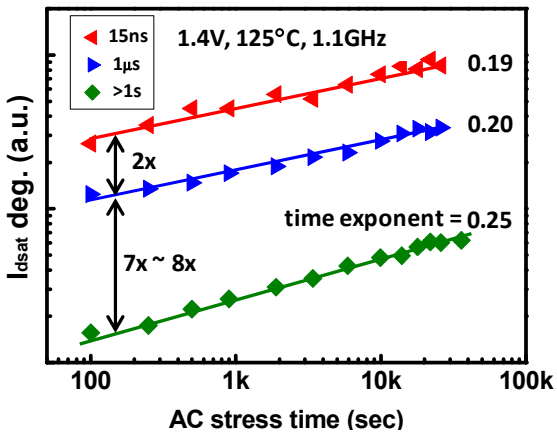

Figure 4. Considerable more degradation can be observed with shorter delay time. Larger time exponent for long delay time is in accordance with relaxation of time zero measurement or *delay artifacts* [13]. Note that a large chunk of degradation, e.g. half at 1.1GHz, recovered within 1µs.

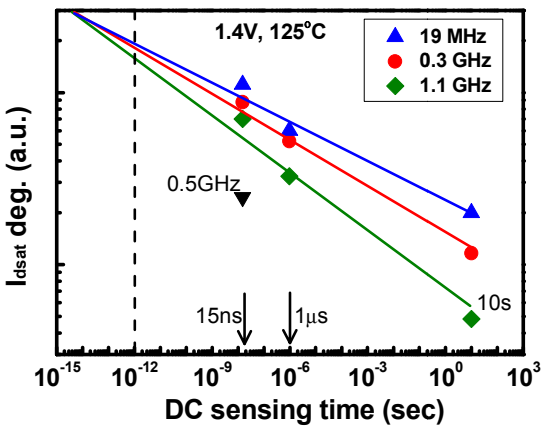

Figure 5. I_{dsat} degradation versus DC sensing time for AC stresses (1.4V, 125°C) at frequencies 19MHz, 0.3GHz, and 1.1GHz. Each data point corresponds to mean value of several measurements. Despite the frequency dependence, total degradations at different frequencies are getting closer at the end of short sensing time. The convergent point for degradation is close to 1fs. Operation faster than 500GHz (with 1ps half cycle) is regarded as far beyond the typical operation speed of most logic circuits.

However, the degradations at varied frequencies tend to converge toward each other in very short recovery time frame (~1ps-1fs). In another way, it is pointing out that the characterization of recovery effect within 1ps is not that important because it already reaches the pulse width of a 500GHz signal. The confluence exhibits a more realistic scenario that is the near saturation of total trappings. In spite of the non-monotonic frequency dependence as pointed out in [14] due to varied relaxation rate, the actual degradation after countless AC cycles could well be the same. Although more fast traps should subsist at faster frequency but the extrapolated aggregate holes seems similar at different frequencies.

C. *Activation energy E_a*

Activation energy (E_a) based on lifetime at 5% ΔI_{dsat} is extracted in this study. DC E_a value is found to be ~ 0.51eV with 10s sensing in agreement with the result [3] as shown in Fig. 6. It suggests interface trap hydrogen species diffusion and bulk trap formation. This also implies NBTI is the result of two

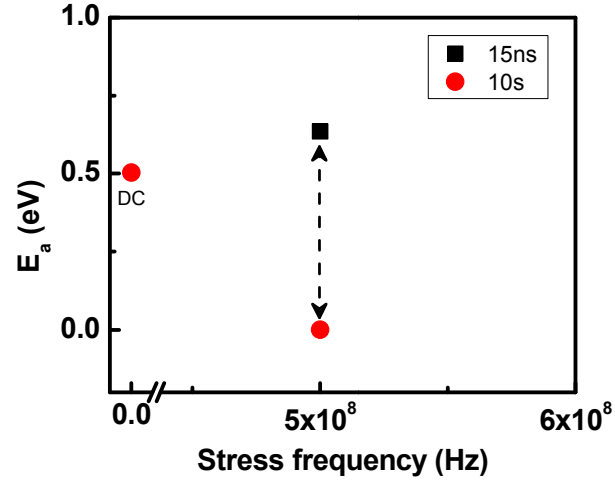

Figure 6. Negligible E_a after long delay suggests traps escape to bulk via tunneling [18]. This behavior is quite different from DC stress which owns non-zero E_a. Higher E_a (0.63eV) for 15ns sensing time implies minimum hole de-trapping.

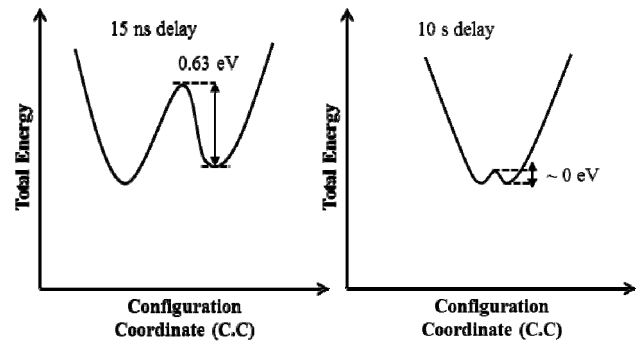

Figure 7. A conceptual configuration coordinate diagram illustrates the delay time evolution related temperature activation. Small thermal barrier makes de-trapping easier.

tightly coupled mechanisms, particularly, generation of interface states and trapping of holes via elastic tunneling [3, 15]. However, E_a value at 500MHz with 10s sensing shows very weak temperature dependence. On the other hand, a large E_a value of 0.63eV is found for 15ns sensing at 500MHz. This discrepancy in E_a values can be qualitatively explained by two-state energy profile in conceptual configuration diagram as shown in Fig. 7. It is basically structural relaxation when defect/trap captures carrier (in this case hole) and interacts with surrounding crystal lattice results in a change of equilibrium position when defect/trap charge state changes (e.g. by emission) [16, 17]. In Fig. 7, two wells correspond to two states with capture hole and without capture hole. Here, one should note that the two states may or may not be in same energy level. Transition from one state to other state requires thermal activation [16]. Thus negligible E_a value at 500MHz with 10s sensing indicates that a significant portion of the trapped holes discharge from the tunneling distance of the bulk with weak temperature dependence of emission time (see right of Fig.7) [18-20]. On the other hand, a large E_a value of 15ns sensing at 500MHz suggests minimal hole de-trapping due to existence of 0.63eV thermal energy barrier between two states as shown in Fig. 7 (left) in configuration coordinate diagram.

Authorized licensed use limited to: National Institute of Technology- Delhi. Downloaded on April 14,2026 at 13:05:56 UTC from IEEE Xplore. Restrictions apply.

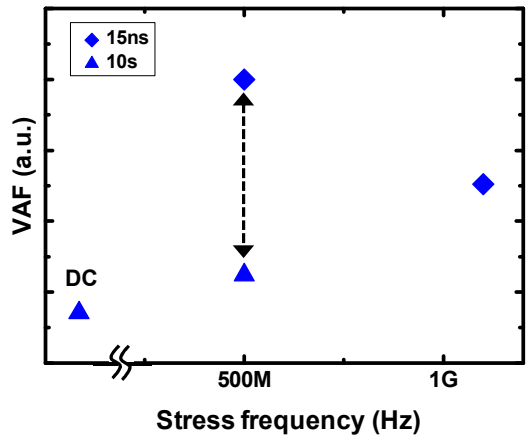

Figure 8. Voltage acceleration factor (VAF) at 500MHz is less notable for 10s delay time because most of the degradations are recovered.

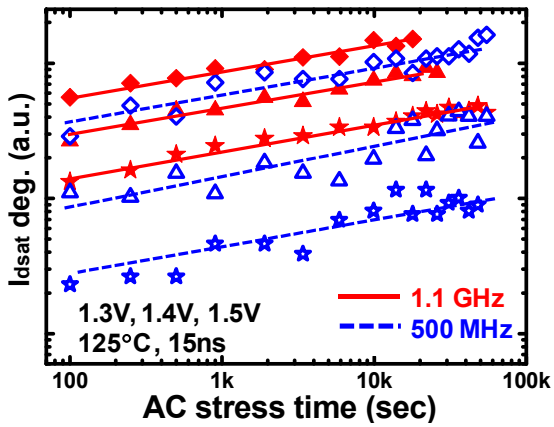

Figure 9. The spacing between degradation curves are narrower at 1.1GHz than 500MHz. So, more degradation does not necessarily lead to higher VAF. Each space-energy distribution of traps has its own characteristic frequency.

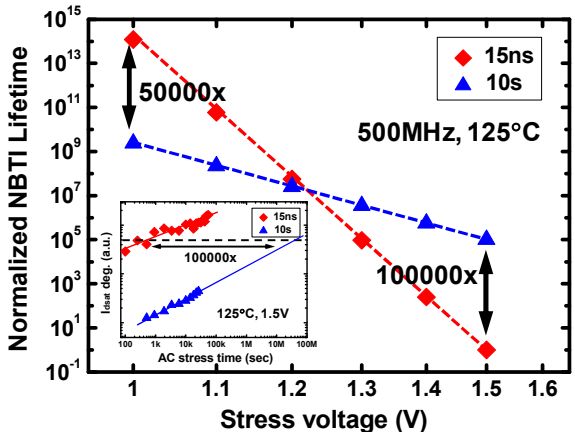

Figure 10. The lifetime with minimum recovery would be much shorter compared to long relaxation measurement. Due to its large VAF, the extrapolated lifetime to 1V ($1.25xV_{dd}$) at 500MHz of 15ns sensing time will be exceptional longer (50000x) than the extrapolation based on 10s relaxation.

D. Voltage accelration factor (VAF) and lifetime prediction

VAF is one of the important factors for projecting the NBTI lifetime at operating voltage condition. VAF based on power law was extracted at only a few frequencies for comparison purpose. Here, multiple failure mechanism effect is neglected and VAF is considered to be stress condition independent. There is a notable gap in VAF yielded by the difference between 15ns and 10s relaxation time, at 500MHz (Fig. 8). A much larger VAF after 15ns attests most of the traps at high frequency are fast traps that recover very rapidly. It makes voltage acceleration less apparent after longer recovery time. The frequency dependence of VAF can be conceptually explained by the effective distances (distributed over space and energy) begotten by each own characteristic frequency. So, more degradation does not necessarily lead to larger VAF (Fig. 9). Although NBTI lifetime for 15ns sensing time is only a fraction of 10s due to greater degradation, the extrapolated lifetime of 15ns can to be considerable longer than 10s value (Fig. 10). It suggests the degradation induced by NBTI might be less than expected under real operation condition in a fast switching circuit.

IV. Conclusion

For the first time, sub-microsecond delay behavior of NBTI in advanced HK/MG technology is characterized. Result verifies the existence of substantial recovery within 1µs. Although frequency dependence still persists after 15ns relaxation, there might be a same saturated amount of degradation regardless stress frequency. Nevertheless, extracted VAF and E_a values indicate characteristic frequencies have distinct space-energy distribution of traps. Large degradation with minimum recovery could be compensated by higher VAF value for lifetime extrapolation. As long as recovery effect is not negligible within 1ns, comprehensive study of frequency dependence will still be necessary for beyond GHz applications.

Acknowledgment

The authors would like to express their gratitude to Dr. N.S. Tsai, K. Wu, and R. Hsieh for the managerial support and to TSMC R&D team for the Silicon manufacturing.

References

[1] T.-Y. Yew, Y.-C. Huang, M.-H. Hsieh, W. Wang, W.-S. Chou, P.-Z. Kang, Y.-H. Lee, and K. Wu, "The Impacts of Inverter-like Transitions on AC TDDB in a Fast Switching Logic Circuit," IEEE International Integrated Reliability Workshop, pp. 122105, 2014.

[2] M.-H. Hsieh, D. Maji, Y.-C. Huang, T.-Y. Yew, W. Wang, Y.-H. Lee, J.R. Shih, and K. Wu, "Frequency Dependence of NBTI in High-k/Metal-gate Technology," IEEE International Reliability Physics Symposium, pp. XT.3.1-XT.3.5, 2014.

[3] M.A. Alam, and S. Mahapatra, "A Comprehensive Model of PMOS NBTI Degradation," Microelectronics Reliability, 45, pp.71-81, 2005.

[4] V. Huard, M. Denais, C. Parthasarathy, "NBTI Degradation: From Physical Mechanisms to Modelling," Microelectronics Reliability, 46, pp.1-23, 2006.

[5] A. Teramoto, R. Kuroda, and T. Ohmi, "NBTI Mechanism Based on Hole-Injection for Accurate Lifetime Prediction," ECS Transactions, vol. 6, no. 3, pp. 229-243, 2007.

[6] D. S. Ang, and S. Wang, "Recovery of the NBTI-Stressed Ultrathin Gate p-MOSFET: The Role of Deep Level Hole Traps," IEEE Electron Device Letter, vol. 27, no. 11, pp. 914-916, 2006.

[7] T. Greasser, K. Rott, H. Reisinger, M. Waltl, J. Franco, and B. Kaczer, "A Unified Perspective of RTN and BTI," IEEE International Reliability Physics Symposium, pp. 4A.5.1-4A.5.7, 2014.

Authorized licensed use limited to: National Institute of Technology- Delhi. Downloaded on April 14,2026 at 13:05:56 UTC from IEEE Xplore. Restrictions apply.

[8] D. Ielmini, M. Manigrasso, F. Gattel and G. Valentini, "A Unified Model for Permanent and Recoverable NBTI Based on Hole Trapping and Structural Relaxation," IEEE International Reliability Physics Symposium, pp. 26-32, 2009.

[9] N. Goel, S. Mukhopadhyay, N. nanaware, S. De, R.K. Pandey, K.V.R.M. Murali, S. Mahapatra, "A Comprehensive DC/AC Model for Ultra-Fast NBTI in Deep EOT Scaled HKMG p-MOSFETs," IEEE International Reliability Physics Symposium, pp. 6A.4.1-6A.4.12, 2014.

[10] A.E. Islam, S. Mahapatra, S. Deora, V.D. Maheta, and M.A. Alam, "On the Difference Between Ultra-fast NBTI Measurement and Reaction-Diffusion Theory," Proc. IEEE Int. Electon Devices Meeting, pp. 31.2.1-31.2.4, 2009.

[11] X. Wang, S.-Hwan. Song, A. Paul, C.H. Kim, "Fast Characterization of PBTI and NBTI Induced Frequency Shift under Realistic Recovery Bias Using a Ring Oscillator Based Circuit," IEEE International Reliability Physics Symposium, pp. 6B.2.1-6B.2.6, 2014.

[12] V.D. Maheta, E.N. Kumar, S. Purawat, C. Olsen, K. Ahmed, and S. Mahapatra, "Development of an Ultrafast On-the-fly I_{DLIN} Technique to Study NBTI in Plasma and Thermal Oxinitride p-MOSFETs," IEEE Trans. On Electron Devices, vol. 55, no. 10, pp. 2614-2622, 2008.

[13] D. Ielmini, and F. Gattel, "Delay Correction for Accurate Extraction of Time Exponent and Activation Energy of NBTI," IEEE Electron Device Letter, vol. 30, no. 6, pp. 684-686, 2009.

[14] Y.-C. Huang, T.-Y. Yew, W. Wang, Y.-H. Lee, J.R. Shih, and K.Wu, "Re-investigation of Frequency Dependence of PBTI/TDDB and Its Impact on Fast Switching logic Circuits," IEEE International Reliability Physics Symposium, pp. 4A.4.1-4A.4.5, 2013.

[15] T. Grasser, and B. Kaczer, "Evident That Two Tightly Coupled Mechanisms are Resposible for Nagative Bias temperature Instability in Oxinitride MOSFETs," IEEE Trans. On Electron Devices, vol. 56, no. 5, pp. 1056-1062, 2009

[16] D. Ielmini, M. Manigrasso, F. Gattel and G. Valentini, "A New NBTI Model Based on Hole Trapping and Structural Relaxation in MOS Dielectrics," IEEE Transactions on Electron Devices, vol. 56, no. 9, pp. 1943-1952, 2009

[17] N. Gong, R. Wang, C. Liu, J. Zou, R. Huang, "On the AC Random Telegraph Noise (RTN) in MOS Devices: An Improved Multi-phonon Based Model," IEEE International Conference on Solid-State and Integrated Circuit Technology, pp. 1-3, 2012.

[18] M. Denais, V. Huard, C. Parthasarathy, G. Ribes, T. Perrier, N. Revil, and B. Bravaix, "Interface Trap Generation and Hole Trapping Under NBTI and PBTI in Advanced CMOS Technology with a 2-nm Gate Oxide," IEEE Transactions on Device and Materials Reliability, vol. 4, no. 4, pp.715-722, 2004.

[19] J. Franco, B. Kaczer, M.T. Luque, P.J. Roussel, T. Kauerauf, J. Mitard, L. Witters, T. Grasser and G. Groeseneken, "SiGe Channel Technology: Supior Reliability toward Ultra-Thin EOT Devices – Part II: Time – Dependent Variability in Nanoscaled Devices," IEEE Trans. On Electron Devices, vol. 60, no. 1, pp. 405-412, 2013.

[20] A. Bravaix, D. Goguenheim, N. Revil, and E. Vincent, "Deep Hole Trapping Effects in the Degradation Mechanisms of 6.5 to 2 nm Thick Gateoxide PMOSFETs," Microelectronic Engineering., vol. 72, no. 1-4, pp. 106–112, 2004

Authorized licensed use limited to: National Institute of Technology- Delhi. Downloaded on April 14,2026 at 13:05:56 UTC from IEEE Xplore. Restrictions apply.